# Automated Circuit Breaker Monitoring

*U.S. DOE CERTS Project*

**Power Systems Engineering Research Center**

*A National Science Foundation*
*Industry/University Cooperative Research Center*
*since 1996*

# Power Systems Engineering Research Center

# Automated Circuit Breaker Monitoring

**Project Report for the U.S. Department of Energy's Consortium for Electric Reliability Technology Solutions (CERTS)**


**Report Authors**

**Mladen Kezunovic**
**Maja Knezev**
**Zarko Djekic**
**Texas A&M University**



**PSERC Publication 07-38**

**November 2007**

## Information about this project

For information about this project contact:

Mladen Kezunovic, Ph.D.
Texas A&M University
Department of Electrical Engineering
College Station, TX 77843
Tel: 979-845-7509
Fax: 979-845-9887
Email: kezunov@ece.tamu.edu

## Power Systems Engineering Research Center

This is a report provided by the Power Systems Engineering Research Center (PSERC) which participates in CERTS (http://www.certs.lbl.gov). PSERC is a multi-university Center conducting research on challenges facing the electric power industry and educating the next generation of power engineers. More information about PSERC can be found at the Center's website: http://www.pserc.org.

For additional information, contact:

Power Systems Engineering Research Center
Arizona State University
Department of Electrical Engineering
Ira A. Fulton School of Engineering
Phone: (480) 965-1879
Fax: (480) 965-0745

## Notice Concerning Copyright Material

PSERC members are given permission to copy without fee all or part of this publication for internal use if appropriate attribution is given to this document as the source material. This report is available for downloading from the PSERC website.

©2007 Texas A&M University. All rights reserved.

# Disclaimer

This report was prepared as an account of work sponsored by an agency of United States Government. Neither the United States Government nor any agency thereof, nor any of their employees, makes any warranty, express or implied, or assumes any legal liability or responsibility for the accuracy, completeness, or usefulness of any information, apparatus, product, or process disclosed, or represents that its use would not infringe privately owned rights. Reference herein to any specific commercial product, process, or service by trade name, trademark manufacturer, or otherwise does not necessarily constitute or imply its endorsement, recommendation, or favoring by the United States Government or any agency thereof. The views and options of authors expressed herein do not necessarily state or reflect those of the United States Government or any agency thereof.

# Acknowledgements

The reported research was coordinated by the Consortium for Electric Reliability Technology Solutions (CERTS), and funded by the Office of Electric Transmission and Distribution, Transmission Reliability Program of the U.S. Department of Energy under Interagency Agreement No.DE-AI-99EE35075 with the National Science Foundation. The support for the project also comes from CenterPoint Energy in Houston, Texas where the hardware and software developments from this project have been installed for field-testing.

# Executive Summary

A complete system for automated monitoring of multiple circuit breakers is developed for DOE by Texas A&M University. This system is characterized by a wireless-based architecture for data communication between newly developed Circuit Breaker Monitors (CBMs), as well as concentrator computer with intelligent software for automated analysis.

Circuit breakers are very important elements of the electrical power system. Usually, circuit breakers are manually initiated to interrupt current flow during normal operating conditions. They may also be automatically initiated to interrupt short-circuit currents during faults. The ability to operate a breaker and isolate a portion of the power system is very critical task and circuit breakers must be very reliable.

This document consists of three parts. The first two parts give the hardware and software prototype specification respectively. The third part provides details of the filed demonstration. The solution is aimed at automating the analysis of switching sequences using GPS-synchronized records from the control circuitry collected by CBM devices installed at each breaker.

Hardware report is described in PART 1. It defines improvements in the circuit breaker monitoring (CBM) device made during the year 2006. Signal conditioning board, communication protocol and time synchronization module have been modified and upgraded. These modifications are necessary to enable monitoring over the entire power system and to reduce cost of the device. Report presents lab and field-test setups. Two CBM units are developed and installed at CNP substation in south Houston area. Functional requirement specification for automated circuit breaker monitoring device is created and attached in the appendix. Final reports for year 2003 and 2005 are also provided in the appendices of PART 1.

The software specification is given in PART 2. This part of the report describes the types of sequences to be analyzed and their properties of interest. The specification outlines the system architecture pointing out how multiple CBM devices are synchronized using GPS receivers located in substations. The specification gives details of the requirements for the application software consisting of modules that perform signal processing for feature extraction and expert system reasoning for analysis conclusions. The specification of the software also includes detailed requirements for the user interface, which is needed at a location where the users of the information are situated. The specification outlines requirements for software testing.

Third part (PART 3) presents in-service demonstration of hardware and software developed for DOE by Texas A&M University. The topology builder software is used to provide spatial component of the sequence analysis. This tool enables user to draw topology of the power system, which should be analyzed. The Sequence Analyzer application, which makes it possible to track sequence of events and make conclusions about their effect, is demonstrated. Finally, status of hardware is briefly presented, which is specified in more details in PART 1.

This solution is developed and tested at a prototype stage and is now ready for further design tuning and filed deployment leading to a commercial product.

# PART 1

# Hardware Implementation

## Table of Contents

1. Introduction ..... 1
2. CBM ..... 1
   2.1. Signal Conditioning Module ..... 1
   2.2. Communication Protocol ..... 2
   2.3. Time Synchronization ..... 3
3. Field Testing ..... 4
4. Conclusion ..... 7
5. Appendices ..... 8
   Functional Requirement Specification ..... 8
   Final Report for FY 2003 ..... 53
   Final report for FY 2005 ..... 90

## Table of Figures

**Figure 1.1** Functionality of SCB module ..... 1
**Figure 1.2** CBM Communication algorithm ..... 2
**Figure 1.3** CBM Time synchronization circuit ..... 3
**Figure 1.4** CBM Time synchronization setup ..... 4
**Figure 2.1** The CBM substation setup ..... 5
**Figure 2.2** The CBM unit set up near the breaker ..... 5
**Figure 2.3** Close event record example ..... 6
**Figure 2.4** Phase currents measured during close event ..... 6

# 1. Introduction

This report presents work done on Automated Circuit Breaker Monitoring project during the year of 2006. Previous work is described in annual reports for 2003 and 2005. During year 2006, we have developed two CBM devices. Both devices are installed in CenterPoint Energy 345kV substation Obrien in south Houston. The first CBM device - CBM1 is installed a year ago. The second one, CBM 2, has implemented new features: New signal conditioning board, communication protocol and time synchronization.
Detailed Functional Requirement Specification for Automated Circuit Breaker Monitoring system is given in Appendix. Final reports for year 2003 and 2005 are also provided in the Appendix.

# 2. CBM

Signal conditioning boar, communication protocol and time synchronization module have been modified and upgraded during the 2006. These modifications are necessary to enable I jmonitoring over the entire power system and to reduce cost of the device.

## 2.1 Signal Conditioning Module

New signal conditioning board with better over voltage protection on input side is developed, tested in lab and installed as a part of CBM 2 device. It limits the maximum voltage on the input amplifier to 220V, which is harmless for amplifiers. Functionality of new signal conditioning board is shown in Figure 1.1. It has implemented two features: over voltage protection and voltage level conditioning. Over voltage protection is realized with high voltage suppression Zener diodes.

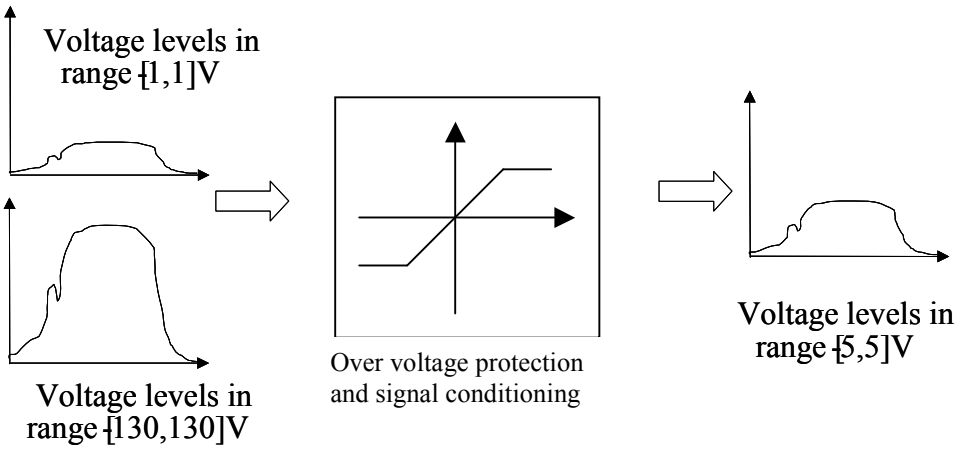


Fig. 1.1: Functionality of SCB module

## 2.2 Communication Protocol

New communication protocol for CBM provides multipoint communication and time synchronization enabling usage of several CBMs in one substation. We established point-to-multipoint communication network. Considering the fact that concentrator has to communicate with more than one DAU at the time, the main idea is that concentrator is polling all of DAUs in a schedsuled way in order to determine if any of DAUs has a file to send. If it has, the Master unit initiate file transfer. The Master unit communicates with slaves using comands. Commands are divided in two parts. In the first part master sends CBM ID and in the second part it sends command to be executed. Communication algorithm with comand execution and data sending is shown in Figure 1.2.

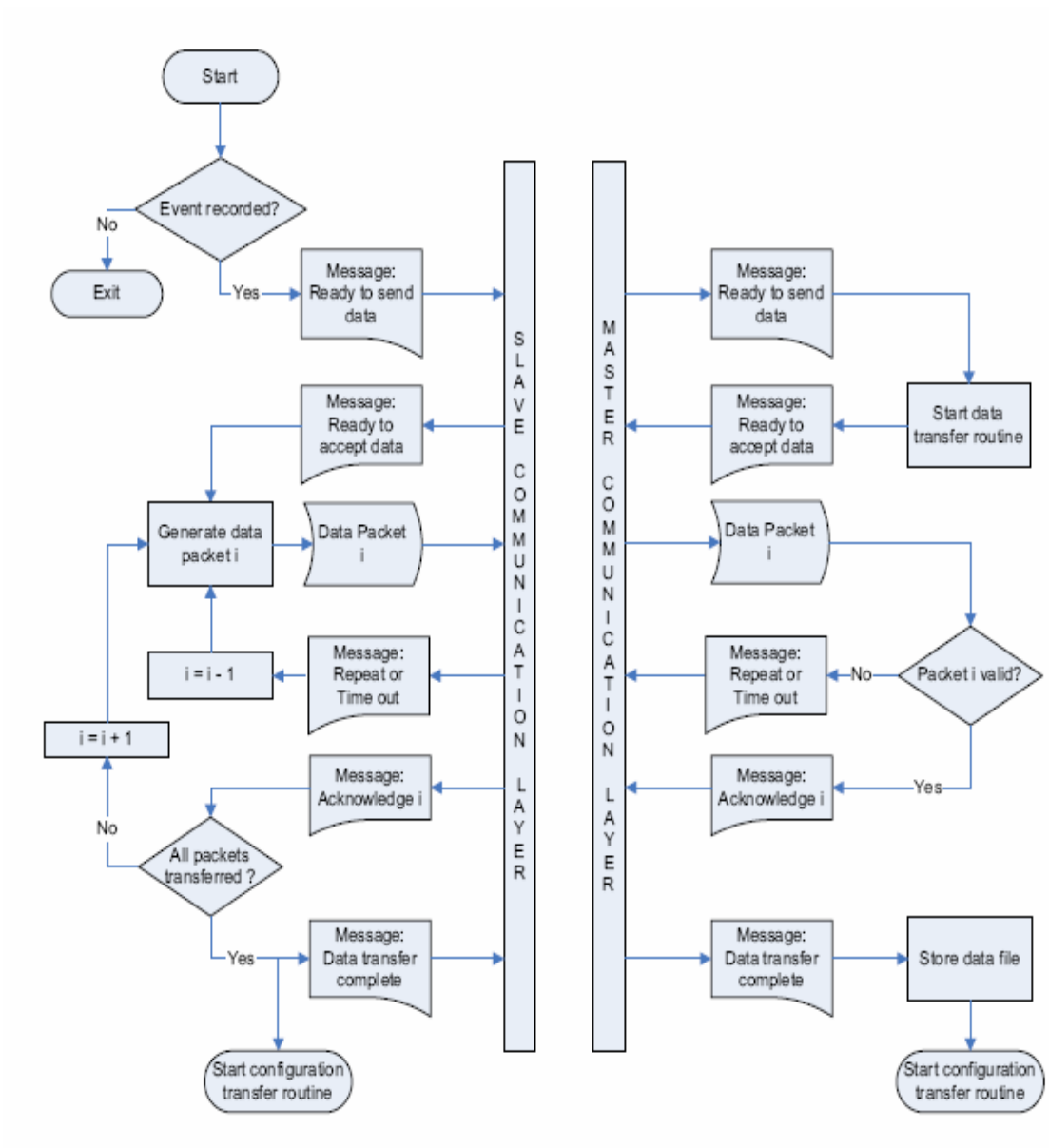


Fig. 1.2: CBM Communication algorithm

## 2.3 Time Synchronization

Time Synchronization is implemented in the CBMs using a GPS clock receiver and wireless modems for time distribution to devices in a switchyard. The GPS Synchronization signal (1PPS) is distributed from the master radio modem located in the control house to the slave units at each CBM device. In this way only one GPS receiver per substation is needed. Radio modems used for CBM have implemented the option for 1PPS distribution from master modem to several slave units.

Time stamp transfer from GPS to CBMs has been implemented using a CBM communication protocol. This setup shown in Fig. 1.4 achieves time accuracy better than 10usec, which satisfies the requirements for this application.

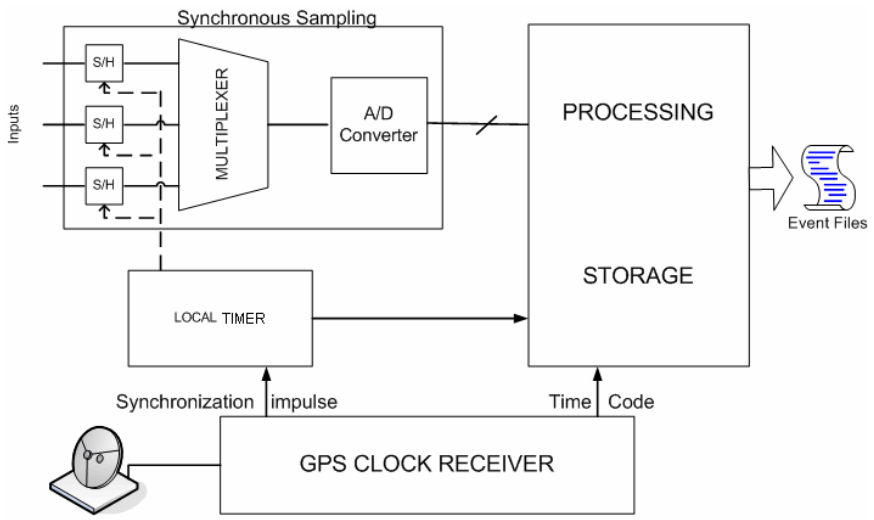


Fig. 1.3: CBM Time synchronization circuit

The sampling signal "start" comes from the local timer, which is synchronized with 1PPS signal from the GPS using interrupt routine on parallel port of Data Acquisition Module from Fig. 1.3. The local timer is used as the time reference for sampling between two synchronization pulses from the GPS. The local clock has a very small time drift between the two pulses so that it does not affect sampling accuracy. For every sample, the processor creates a time stamp using the GPS time code received through communication protocol and the actual time from the local timer. Time stamp received from concentrator determines date, hour, minute and second but microsecond resolution determines local timer which is synchronized with GPS every second. By using signal values and time stamps, CBM generates event reports in COMTRADE format with time stamp assigned to all samples. Further details of time synchronization set up are shown in Fig. 1.4.

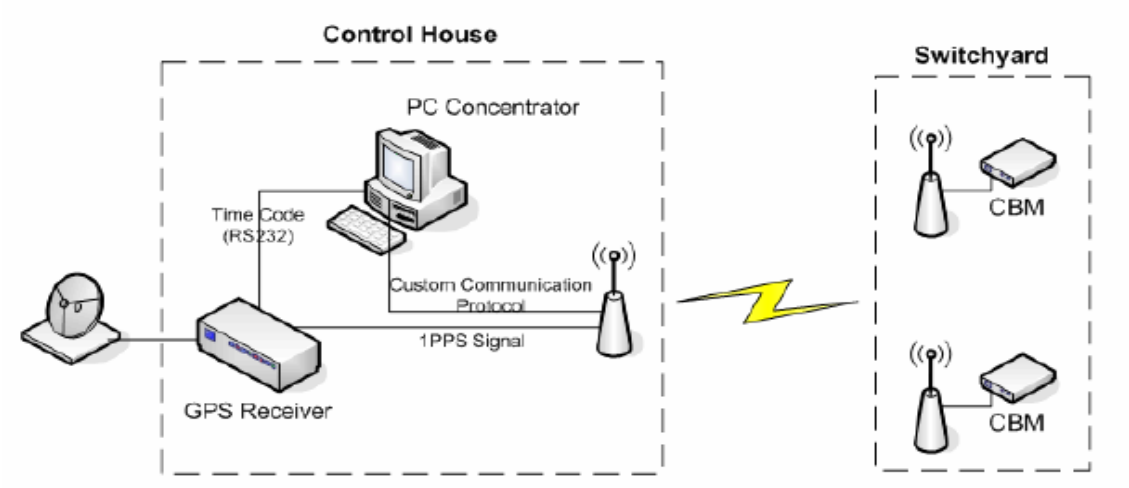


Fig. 1.4:. CBM Time synchronization setup

Time code is transferred in DOS format, which means that time value represents number of seconds elapsed from 01/01/1980. Between two time stamp transfers CBM updates the time stamp by incrementing time after every PPS signal received from GPS clock. Time transfer is repeated periodically to correct possible error caused by lost impulse. We update time stamp every minute to avoid synchronization error.

***Note: New functions developed for CBM 2 implemented on CBM 1 device: Time synchronization and new communication protocol***

## 3. Field Testing

Both Circuit Breaker Monitors have been tested in a field setup at CenterPoint Energy Obrian substation. The slave units (CBM devices) were set up at breakers, which operate on a 345kV line. The slave units' hardware was made weatherproof by sealing the metallic box with a sealant.

The breakers are located at an approximate distance of 150m from the control house. They are connected to the Substation PC through a wireless RS232 network in point-to-multipoint configuration. The master side software is installed on the substation PC and initialized to start reception. In normal work condition we cannot expect more than few events per month because breakers operate rarely. In test phase we implement special features to enable efficient testing of Circuit Breaker Monitor devices. We setup log file procedure. That means that we record and send real data file in equal time intervals. We decided that one record per day is enough to check current status of CBM. In this way we can collect and compare large number of records in relatively short period of time. Figure 2.1 shows CBM setup in Obrian substation.

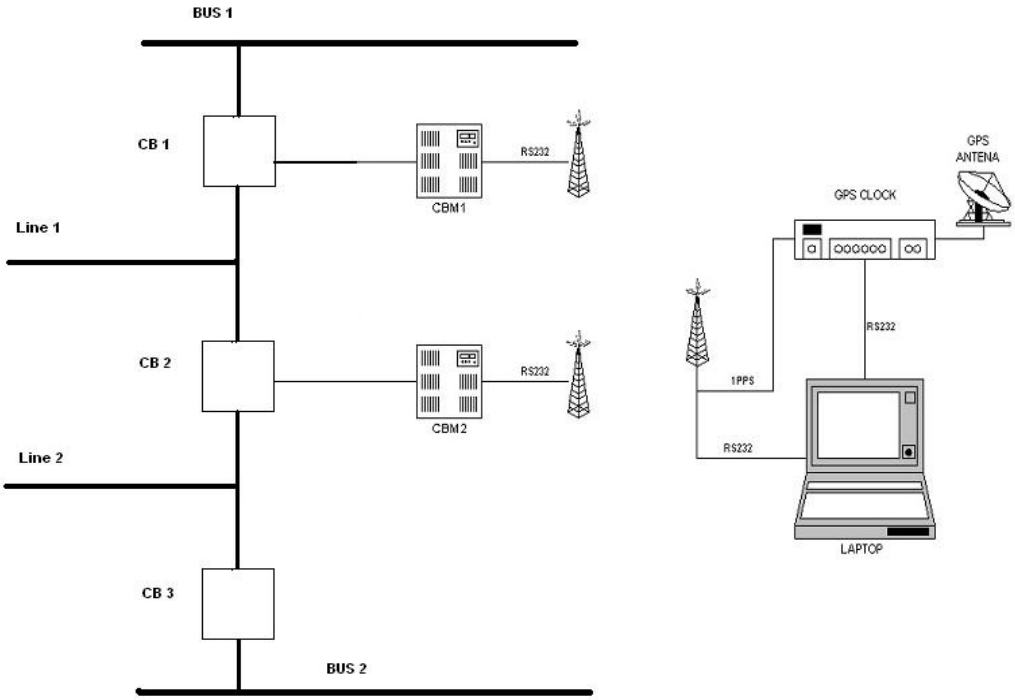


Figure 2.1: The CBM substation setup

Circuit breakers are wired on CB control panel using RTR connector. This type of installation is noninvasive (does not require forced breaker operation).

Figure 2.2: The CBM unit set up near the breaker

The units were energized by AC power drawn from the breaker AC line. The master unit wireless transceiver was packed in a weatherproof box and installed outside the control house so as to have a line of site between the transceivers. The master unit transceiver is connected to the Substation PC through a RS232 cable onto the serial port.

Fig. 2.3 shows the waveforms of the Close initiate, ”b” contact and ”a” contact signals recorded by the monitoring system during a close event. Fig. 2.4 shows how the phase currents change on a close event. The figure has the same time scale as Fig. 2.3. By comparing the ideal signal waveforms to those shown in Figures 2.3 and 2.4 it can be concluded that the Circuit Breaker Monitoring records the signals effectively.

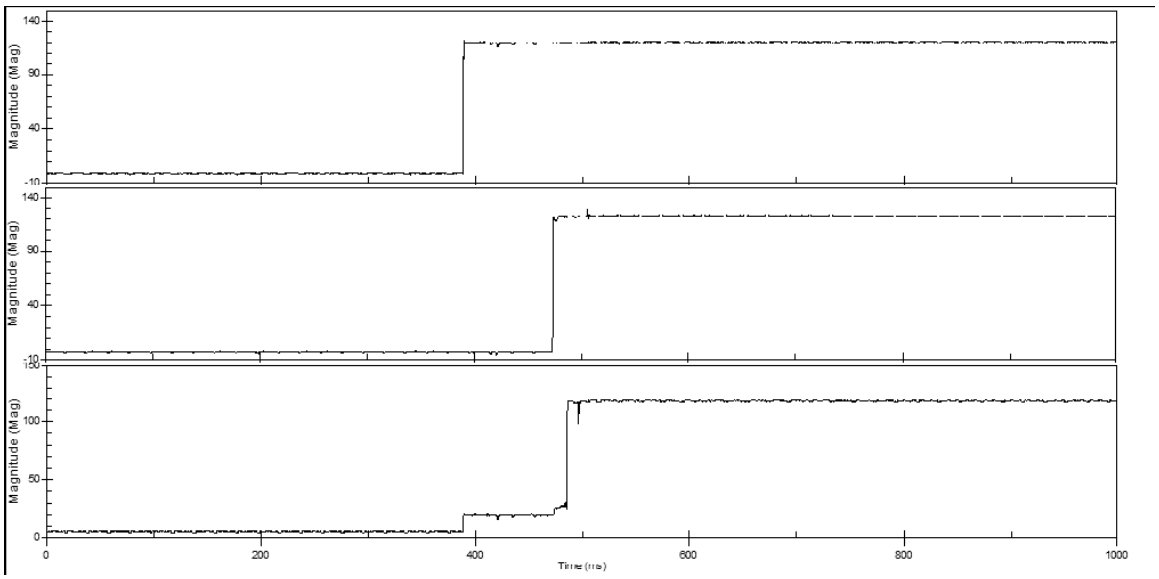


Figure 2.3: Close event record example

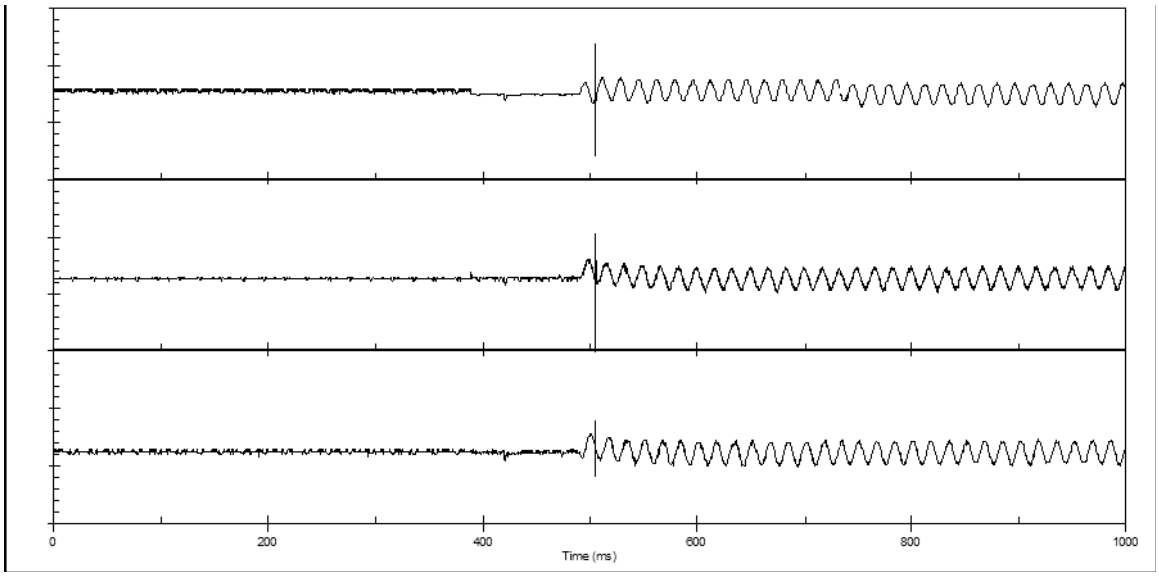


Figure 2.4: Phase currents measured during close event

## 4. Conclusion

This report described the modifications implemented of the new prototype Circuit Breaker Monitoring. The hardware and its integration details were described for both the slave and the master unit. The development of the communication protocol for master unit, which co-ordinates the data acquisition and time synchronization among slaves and makes the data accessible to other applications was discussed. This report also discusses the evaluation of the circuit breaker monitoring system in field conditions. Field-testing performed in a substation is described and the recorded results are compared.
Software for CBM data analysis is developed and described in report:

M. Kezunovic, M. Knezev, Automated Circuit Breaker Monitoring – Software Requirements Specification Version 2.5, DOE - CERTS, June 2006.

Final Reports for years 2003 and 2005 are attached in appendices.

# Functional Requirement Specification

**Texas A&M University**

**Department of Electrical and Computer Engineering**

# Automated Circuit Breaker Monitoring

Functional Requirement Specification

Prepared by:
**Zarko Djekic**

July 2007

## TABLE OF CONTEST

1. 1. BACKGROUND ..... 3
1.1 Introduction ..... 3
2. Circuit Breaker Monitoring ..... 5
2.1 Circuit Breaker Status Monitoring ..... 5
2.2 Circuit Breaker Condition Monitoring ..... 7
2.3 Existing Condition Monitoring Practice ..... 8
3. SYSTEM REQUIREMENTS ..... 9
3.1 Introduction ..... 9
3.2 Parameter and Signal Selection ..... 9
3.3 AD Conversion Requirements ..... 15
3.4 Data Processing Requirements ..... 19
3.5 Signal Processing Requirements ..... 22
3.6 Time Synchronization ..... 24
4. SYSTEM ARHITECTURE ..... 32
4.1 Introduction ..... 32
4.2 Hardware ..... 32
4.3 Software architecture ..... 35
5. CONCLUSION ..... 38
REFERENCES ..... 39

# 1. BACKGROUND

## 1.1 Introduction

Circuit breakers are electromechanical devices used in the power system to connect or disconnect the power flow at the generator, substation, or load location. The circuit breakers are capable of making, carrying and breaking currents under normal circuit conditions and also making, carrying for a specific time and breaking currents under specified abnormal circuit conditions such as those of short circuit [1]. They consist of current break/make contacts, opening/closing mechanism and control circuit. Breaker may have a lifetime of over 40 years. The majorities of the time circuit breakers remain closed and simply act as electrical conductors, but in many occasions, they do indeed perform their intended protective and switching functions. They can be operated by power system protection relays, which detect faults on the system and identify the appropriate breakers needed to be open in order to isolate the faults and enable the rest of the system to function normally. When a fault, in the form of a short circuit current, occurs in an electrical system, it usually becomes necessary to operate an interrupting device. Interruption of the current in a circuit frequently takes place during a transient condition when very high currents are present. The interruption itself produces an additional transient that is superimposed upon the instantaneous conditions of the system, and thus it can be recognized that interrupting devices must cope with transients in the currents generated elsewhere in the system, plus voltage transients that have been initiated by the interrupting device itself. This creates very harsh working condition for circuit breakers. It is very important that circuit breakers are in good condition to be able to interrupt currents and prevent further damage on power system equipment.

In addition, a breaker may be operated through a manual command from power system operators. Sometimes the breaker may not open or close on command, allowing the fault to exist for a longer duration than the system can sustain while functioning normally. Misoperation of breakers can lead to undesired changes in system functioning that may result in the system going in an abnormal state, potentially causing power outage.

The circuit breaker forms a critical part of the protection system, as well as the Supervisory Control and Data Acquisition system (SCADA) used for power system switching. Opening or closing the contacts of a circuit breaker is normally done in a very random fashion and consequently transient current and voltage disturbances may appear in the electrical system. In many cases, it is possible to control these transients by operating the circuit breaker in synchronism with either the current or the voltage oscillations, depending upon the type of switching operation at hand. This means that, for example, the opening of the contacts should occur at a current zero when interrupting short circuit currents or that the closing of the contacts should take place at voltage zero when energizing capacitor banks. Operations that can benefit the most by synchronized switching are those involving the switching of unloaded transformers, capacitor banks, and reactors. Energizing transmission lines and opening the circuit breaker to interrupt short circuit currents are also good candidates for synchronous switching [2]. Additionally, the success of a synchronized operation will depend upon the proper

matching of the operating characteristics of the circuit breaker with the response of the system. Circuit breaker operating characteristics are changing therefore, it is very important to monitor circuit breaker characteristics over its lifetime to be able to match those characteristics.

As a part of the SCADA, system circuit breakers' contacts are used to determine power system topology. By monitoring open/closed status of all circuit breakers, it is possible to create bus/branch topology configuration of the power system. This information is essential for several power system applications used to improve reliability of the power system, such as power flow, state estimation and alarm processing. In order to ensure operation that is more reliable and status information of circuit breakers all over the system, efficient and adequate circuit breaker monitoring is required.

Electric utilities are pressured to reduce their overhaul and maintenance costs and improve power system operation. One way to accomplish first goal is to extend the interval between maintenance cycles and doing less maintenance, or performing maintenance based on equipment condition rather than time. To sustain the confidence level on this critical piece of equipment different maintenance programs have been established. These programs follow established standards, guidelines [3] and the recommendations of the manufacturer. Usually all maintenance recommendations are based on experience with particular CBs being used in a given system. Performing the same maintenance approach on all breakers can be inefficient especially in the cases when utility company owns large number of units. This is also very costly because of the down time required to perform these procedures. A more logical approach may be to continually evaluate the condition of CBs that through experience have been identified as being the most likely to fail, which could provoke a severe damage that would disrupt the service.

Most of the circuit breaker failures that have been observed in the field can be attributed to mechanical problems and difficulties related to the auxiliary control circuits. A report by CIGRE shows that approximately 25% of the major and minor failures of circuit breakers in service are caused by control circuit failures [4]. By observing control circuit signals, it is possible to make conclusions about CB health. Besides this control, circuit signals can be used to make conclusions about some other parts of circuit breaker device such as mechanical contacts and moving mechanism [5]. The above-mentioned statistics can be used as a guideline for the selection of those components that should be monitored. The most desirable option would be to develop a system that constantly monitors critical components and detects any deterioration that may occur over time and to predict, in a proactive way, impending failures.

To improve system operation, the information obtained by the monitoring system should not be limited exclusively to evaluating the condition of the circuit breaker. It may be used to control sequence of circuit breaker operation and changes in system topology. Further, it can be used to enhance the accuracy of the controls for synchronous operation. More precise and reliable assessment of system topology may be achieved by integrating redundant data from SCADA system and monitoring system. It may also be possible to adjust the initiation of the closing or opening operation to compensate for variations in the making or breaking times that are influenced by the parameters that are being monitored.

The benefits offered by such monitoring should not be restricted to providing information for future use or to developing condition trends about the well being of the circuit breaker that will be applicable to future maintenance actions. Additional monitored parameters may not directly reflect as an improvement in the operation but taken as a whole will serve to increase the reliability of the equipment and power system.

Data collected from circuit breakers in a substation or all over, the system should be combined to make deductions about the system topology and operation performance that could help in increasing system reliability. Such applications require that the collected data should be synchronized in time. While the circuit breaker monitor (CBM) data can provide information about the operation and status of individual circuit breaker, substation and system-wide applications can help to increase reliability by providing information about the sequence of events and topology changes of the power system. Some of this information is also obtained by SCADA. However, the redundant and more detailed information from circuit breaker monitors can be used to verify the consistency and increase redundancy of the measurements thereby increasing robustness of data and reducing operation errors.

## 2. Circuit Breaker Monitoring

The need for proper maintenance of circuit breakers is very important, as circuit breakers may remain idle, either open or closed, for long periods. They are also often located in remote areas, which make their inspection and maintenance more difficult and expensive. To improve reliability of the power system through various system analyses it is necessary to know power system topology configuration. Real time and remote monitoring seems to be perfect solution for equipment conditioning and status monitoring. First remote monitoring of circuit breakers introduced is Supervisory Control and Data Acquisition (SCADA) system. This system is used for CB status monitoring and remote breaker operation. This system monitors status of CB mechanical contacts and transfers it in real time to central place. Condition monitoring is a relatively newer concept that has come about primarily because of recent developments of electronic sensors and data acquisition equipment that have made this idea not only technically feasible but also economically attractive. It is know that the breaker health, status and operating characteristics can be affected by extreme ambient temperatures, and by other prevailing conditions such as mechanism operating energy levels, control voltages, operating frequency of the equipment, its age, and its maintenance history among others. Collecting real time information about these variations, breaker operation and status would provide a good data source to improve breaker maintenance, synchronous operation, topology analysis and other analysis that rely on circuit breaker status or condition data.

### 2.1 Circuit Breaker Status Monitoring

As the demands for reliable electric power became greater and as labor became a more significant part of the cost of providing electric power, technologies known as

“supervisory control and data acquisition,” or SCADA, were developed to allow remote monitoring and even control of most important system parameters. Due to low processing and communication capabilities from the beginning, SCADA was limited to monitoring and control of only critical parameters in a substation. Even with introduction of new microprocessor and communication technologies, the industry was slow to accept these technologies in critical applications. Today SCADA remains limited to simple monitoring and control task such as CB status, voltage and current monitoring and CB remote operation Figure 1.

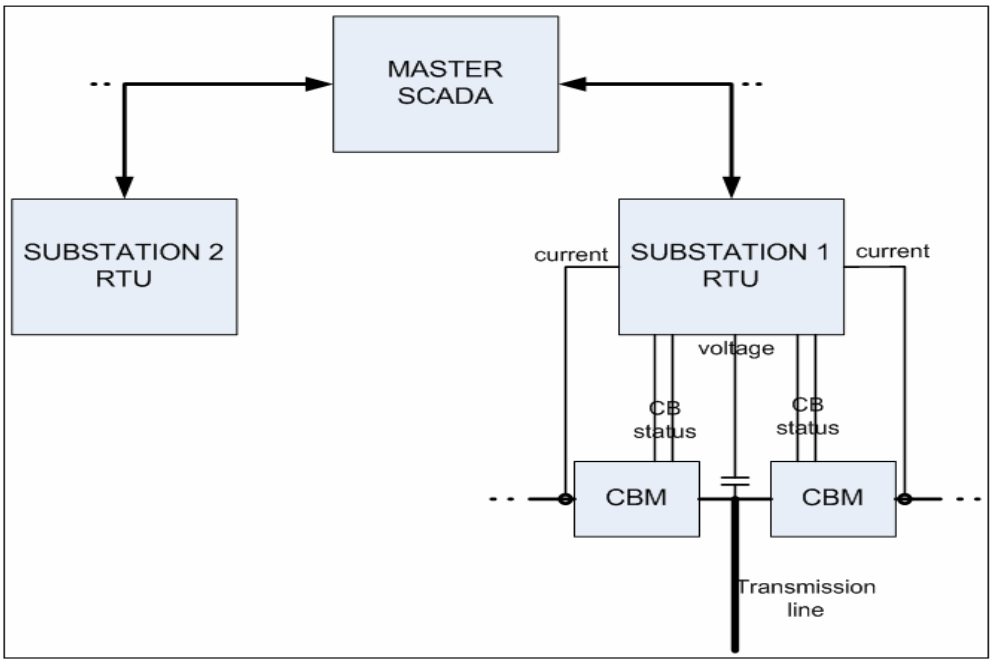


Fig. 1. Traditional SCADA topology

Substation RTU is wired to CB auxiliary contacts (52a and/or 52b), which are used to track circuit breaker status. They operate when the breaker mechanism changes state. The 52a and 52b contact signals represent the voltage across auxiliary switches that specify the open or close status of the circuit breaker - Figure 2. Contact 52a opens when the breaker opens and closes when the breaker closes. It is also called “a contact”. Contact 52 has opposite logic: it opens when the breaker closes and closes when the breaker opens. It is also called “b contact”.

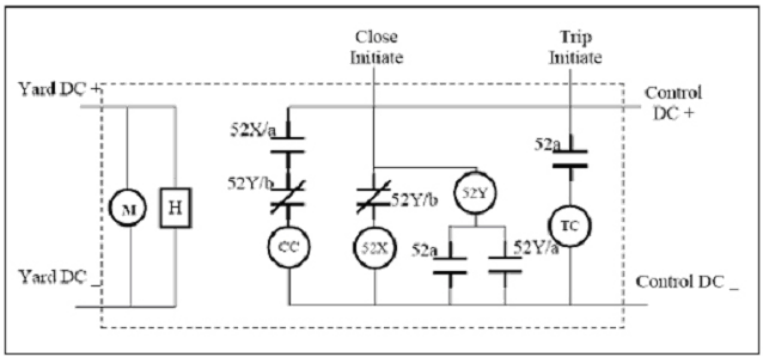


Fig. 2. CB control circuit

SCADA system samples input signals on very low sapling rate and transfers CB status data to the central place - SCADA master. Information available from such a system is statuses from all circuit breakers, which is used by operator and system analysis applications. In some cases, auxiliary contact doesn't show real breaker status due to mechanical, electrical and/or wiring problem. In many cases, wrong status information cannot be detected easily. It could create significant errors in state estimator and alarm processor that can lead to unwanted and unexpected power system operation. Redundant circuit breaker status monitoring should decrease breaker status error probability and increase power system reliability.

### 2.2 Circuit Breaker Condition Monitoring

To keep circuit breaker in good performance condition many maintenance programs have been established. These programs follow standard guidelines and the recommendations of the manufacturer. Maintenance programs are generally based on manufacturers and users operating experience. This practice could be often inefficient and costly because of the down time required to perform maintenance procedures. In many cases, these procedures develop following maintenance of otherwise satisfactorily performing equipment. The burden of circuit breaker maintenance is increasing due to aging equipment, system expansion and customer reliability requirements. A new approach is to continually evaluate the condition of those components that through experience have been identified as being the most likely to fail and those whose failure could provoke a severe damage that would disrupt the service. Condition monitoring is a relatively newer concept that has come about primarily because of recent developments of electronic sensors and data acquisition equipment that have made this idea not only technically feasible but also economically attractive.

Circuit breaker monitoring can be used to improve or develop flowing functions [6]:

- Determine the condition of a specific circuit breaker
- Determine the condition of the circuit breaker support and control functions
- Optimize maintenance activity
- Understanding the condition of a larger population of circuit breakers in similar circumstances by examining a representative sample of the population

- Improve circuit breaker utilization
- Reduce circuit breaker failure rates
- Add to the circuit breaker body of knowledge available to determine the cause of failures after the fact
- Improve economics of equipment operation

There are several experimental and industrial applications of circuit breaker monitors. Some of them are more focused on breaker health condition; the others are more interested in breaker operation. The information that is gathered by the monitoring system does not have to be limited exclusively to evaluating the condition of the circuit breaker, but it also may be used to enhance other power system functions and applications. It is entirely possible to use the data to adjust the initiation of the closing or opening operation to compensate for variations in the closing and breaking times of the circuit breaker. Data could be also used to improve power system topology analysis, alarm processor function and other system analyses. The benefits offered by condition monitoring are also not restricted to provide information about current breaker condition, instead it can be use to improve circuit breaker design and performance.

### 2.3 Existing Condition Monitoring Practice

Different monitoring systems have been designed and proposed to monitor the condition of different breaker elements, detect CB health and predict the time intervals for maintenance. All those devices monitor different physical values such us: the mechanism velocity, phase currents, gas pressure, temperature [7] or circuit breaker vibration [8] etc.

A number of detection systems have been proposed, including the use of acoustic signatures [9] but as of now these systems have not yet been translated into a viable product and they still remain mostly in a demonstration environment. Furthermore, its reliability has to be proven primarily because of its complexity and its high measurement sensitivity, which makes it vulnerable to noise and to the influence of extraneous sources.

Some of the data acquisition systems currently available to cater specifically to measuring quantities from the control circuit [10], [11], [12] are not suitable for on-line monitoring applications of breaker performance in a switching sequence that involves multiple breakers because they do not record enough information to make accurate diagnosis of control circuit faults that may occur on multiple breakers. Most of them do not have sufficient number of channels, online monitoring and time synchronization capabilities to enable the artificial intelligence tools to make good decisions about the status of the breaker and/or system. Most of the existing monitoring systems do not have any option for time synchronization of recorded data. This limits application of data only to the usage for maintenance purposes.

Simpler schemes may provide adequate solution, but naturally, a final choice should be based on an evaluation of the benefits against the complexity and the difficulty of implementing the specifically required monitoring function.

# 3. SYSTEM REQUIREMENTS

## 3.1 Introduction

Circuit breaker monitoring system needs to be designed to collect sufficient information for breaker condition and status estimation. At the same time, it needs to have simple and low cost hardware design. Software should allow reliable operation and easy upgrade capability. First step in the process of circuit breaker monitoring is data acquisition. Data needs to be acquired and stored to enable extraction of any information. Acquisition process has several steps. In one hand, it is very important to acquire sufficient set of data that enables quality analysis in the other hand that set has to be small to keep cost low. Based on circuit breaker operation we need to choose set of signals to be monitored. This set has to be sufficient and carry enough information about breaker condition. After acquisition, those signals need to be converted to digital form to enable simple and efficient data storage, transfer and processing. Data from all circuit breaker monitors needs to be synchronized to enable system wide applications.

## 3.2 Parameter and Signal Selection

There are a large number of parameters and signals that could be monitored for circuit breaker monitoring purposes. There are also many methods to measure or calculate those parameters. The parameter candidates for monitoring should be chosen in such a way that keeps system complexity and price low but at the same time, it gives enough information to make conclusions about breaker and system condition and operations. It is important to have complete set of parameters/signals to be able to perform quality analysis and give reliable breaker status information. Our approach is to avoid direct measurements of mechanical parameters and instead, we should acquire electrical signals necessary to estimate non-electric parameters. Using this approach, we should be able to perform analysis of mechanical and other non-electric parameters measuring only electrical signals available in CB control circuitry. This can eliminate all complicated and expensive transducers necessary for acquisition of mechanical parameters. We can also decrease cost and increase reliability of the monitoring system.

Circuit breaker parameters could be grouped into three groups [13]:

- Components at high voltage
- Control Circuit and Auxiliary Contacts
- Operating Mechanism

## Components at high voltage

Components at high (operating) voltage include insulation bushings, tank medium, and main contacts. Several parameters could be monitored on every part. Dielectric failures and interrupter failures represent a high percentage of the reasons for circuit breaker problems. Many of these failures would take place without any prior warning, but there are some cases where it would be possible to predict as is the case with high levels of corona, high leakage currents, high moisture content and low insulating gas density. Few parameters can be monitored relatively simple, but there are many others, which are difficult to monitor while the circuit breaker is energized and in service. For SF6 circuit breakers, a gas density measurement is only insulation system parameter that could be measured in a live tank mode. Gas pressure and temperature measurements could be used to estimate gas density information. It is very hard to develop universal device, which could monitor gas pressure on all kinds of breakers because different CB vendors install different pressure sensors with variety of output interfaces. Installations of additional sensors require complicated and expensive maintenance procedures. Gas pressure monitoring is accomplished manually by reading values on preinstalled sensors on the breakers during regular inspection.

Monitoring contact erosion and interrupter wear has a direct influence to the required maintenance frequency [14] [15]. Therefore, it is not only desirable but also beneficial to accurately evaluate the condition of the interrupters rather than to rely only on the presently used method of simply adding the interrupted currents until is reached the estimated accumulated duty that is given by the manufacturers' recommendations.

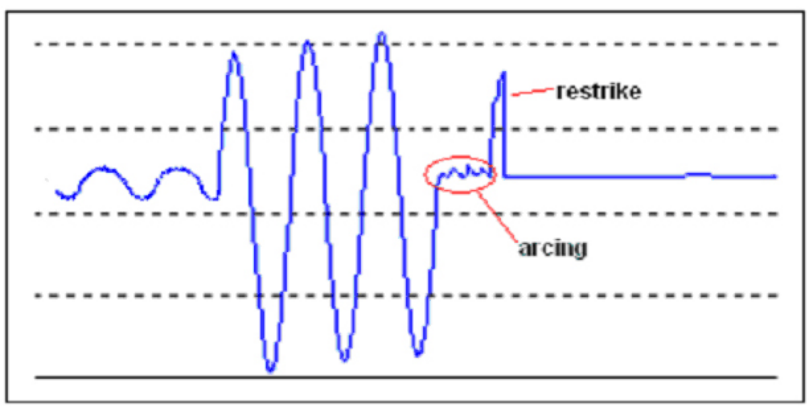


Figure 3. Main contact arcing and restrike

Measurements of contact erosion or interrupter wear cannot be made directly, but it can be done by capturing phase current waveforms and measuring arcing time. These waveforms can be nonintrusively obtained via the secondary currents of the available CTs. The waveforms could be analyzed for cumulative contact erosion and restrike.

Arching time can be also obtained from a measurement of the arc voltage, but the arc voltage measurements are not available on all types of breakers. It can also be calculated by estimating the point of contact separation and duration of current flow from that time until it goes to zero. Monitoring the number of operations, arcing times, and the cumulative magnitudes of current interrupted can allow estimating the condition of the interrupters based on actual duty the circuit breaker has been subjected to.
Monitoring of contact or tank temperatures can indicate high resistance contacts, or broken or missing parts in the contacts and/or current carrying circuit. Contact temperature cannot be measured easily but it can be approximated by measuring the temperature of the surrounding gas, ambient temperature and of the continuous current that is being carried.

**Control Circuit and Auxiliary Contacts**

Monitoring of control circuit and auxiliary signals together provides a lot of timing information. Many conclusions about condition of the mechanical part of the breaker can be obtained by analyzing signals from control circuit and auxiliary contacts. Monitoring of Trip and Close Coil currents is relatively simple task. Monitoring the current drawn by the coils as they are energized and subsequently comparing their signatures can provide useful information.

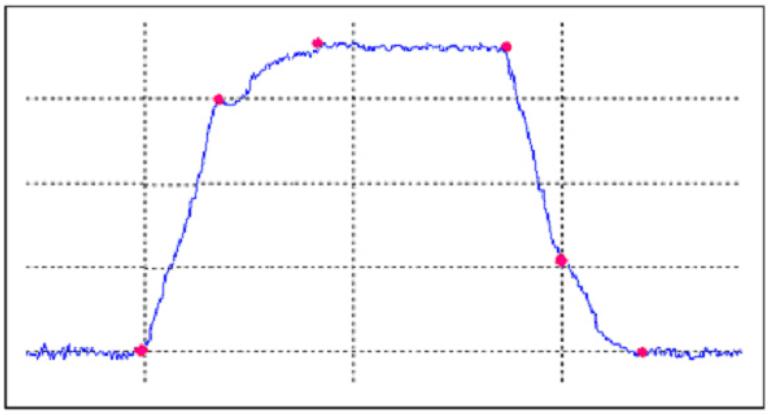

Figure 4. Trip coil current with characteristic points (characteristic times)

Changes that may occur in the timing of these points would indicate possible problems on the mechanical drive system such as condition of the latches, linkage failure, lubrication etc. If for example, the latches are not properly greased, the coil will draw more current and the shape will change. By comparing these signals and specific times of circuit breaker over its lifetime, it could detect possible condition problems. It is also very important that all trip and close currents for three pole breakers are monitors. These currents could be compared to each other to make better circuit breaker condition analysis. Auxiliary contacts provide important information about mechanical operation of the breaker. Together with coil currents, they provide trip/close timing information and

information about incorrect sequence of operation. They could be also used for estimation of travel time and velocity. X and Y auxiliary contact could be used to determine timings of the closing sequence.

AC and DC supply voltages should be also monitored at the circuit breaker to verify adequate voltage supply to the mechanism and control circuits. In some cases, inadequate supply for mechanism and/or control circuit could lead to slow breaker operation or even to breaker failure.

**Operating Mechanism**

The most likely parameters to be monitored because of their significance and the simplicity of the monitoring are: contact travel and velocity, number of operations, space heater condition and ambient temperature. Some guides [13] suggest that charging motor current should be also monitored. The motion characteristics, travel, and velocity will provide main contact performance information. From the measured or estimated contact travel and speed it should be possible to track condition of deterioration of linkages, increased friction that could mean lack of proper lubrication and or deterioration of bearings for example. For example, time difference between the transitions of these two auxiliary contacts is inversely proportional to the velocity of operating mechanism. A deformation of these signals may indicate a dirty contact, a binding mechanism or a slow breaker operation.

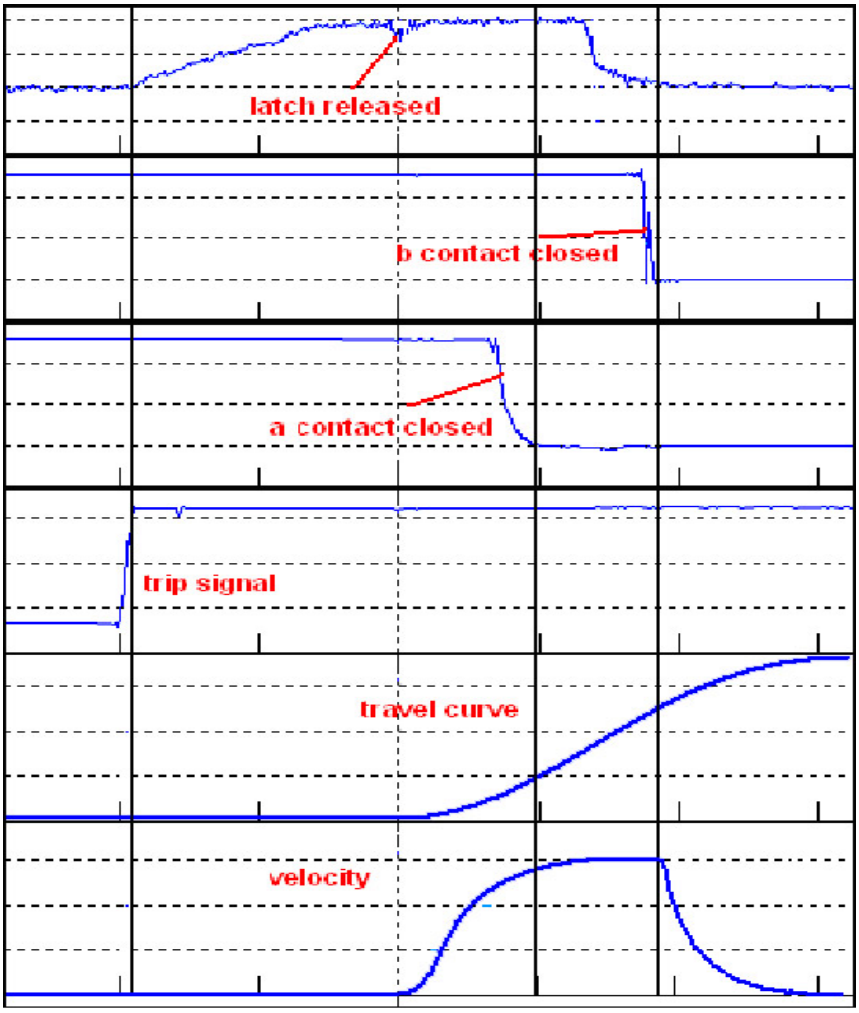


Figure 5. Correlation between control circuit signals and mechanical parameters

It is not always feasible to install a motion transducer to an in-service circuit breaker. Motion transducers used are generally applied in the control cabinet and require a unique transfer function if they are to represent the actual movement of the main contacts. In many cases, motion monitoring may not be recommended for in-service breakers [13]. In that case, some considerable information and travel speed estimate can be derived by online timing monitoring of auxiliary contacts, coil currents and protection inputs [12] - Figure 5.

Heater function is simple but their failure may cause significant problems [5]. Monitoring of the heater elements is a trivial task that can be done by simply measuring continuously control cabinet temperature. One disadvantage of this method is that heaters are not energized all the time but only when the ambient temperature drops below a certain level and consequently a logic circuit that relates ambient temperature to heater temperature should be provided but still it does not provide continuous monitoring of the continuity of the heater element itself during high ambient temperature. This is usually not a problem because during high ambient temperatures heater failure cannot cause such a significant problem. Additionally, monitoring of ambient temperature could be used to check heater

condition as well as to detect deviations from the historical operating characteristics of the circuit breaker under similar conditions. This measurement can also be useful to compensate for variations in the operating time in synchronous switching applications.

Table 1.Circuit breaker parameter and signal selection

| Component | Parameters | Signal Measured |
|---|---|---|
| Control Circuit | Trip timings (slow/fast)<br>Close timings (slow/fast)<br>Sequence of operation<br>Auxiliary switch condition<br>Maladjustment of coils<br>Battery status<br>Battery charger status | Trip Coils (all poles)<br>Close Coils (all poles)<br>Backup Trip/Close Coils<br>Auxiliary contacts (52a, 52b)<br>X, Y coil status<br>Supply voltages |
| Operating Mechanism | Contact travel curve<br>Contact velocity<br>Deterioration of linkages<br>Friction and binding<br>Heater status | Trip Coils (all poles)<br>Close Coils (all poles)<br>Auxiliary contacts (52a, 52b)<br>Heater (Cabinet) Temperature<br>Ambient Temperature |
| Main Contacts | Contact erosion<br>Interrupter wear<br>Arcing time<br>Cumulative interrupted current<br>High contact resistance | Phase currents (a, b, c)<br>Auxiliary contacts (52a, 52b)<br>Tank temperature<br>Number of operations |
| Other | Circuit breaker status<br>Circuit breaker interruption time | Phase currents (a, b, c)<br>Auxiliary contacts (52a, 52b) |

Table 1 sums up the most important circuit breaker condition, operation and status parameters and electrical signals need for quality parameter extraction. Additions to electrical signals from control cabinet are temperature measurements. By choosing these signals, we should be able to extract enough information about circuit breaker condition, status and operation and at the same time to keep system simple as possible. All signals could be monitored online and we should be able to install system without breaker operation.

### 3.3 AD Conversion Requirements

Before any signal analysis, all signals need to be converted to digital form using Analog to Digital (AD) converters. Quality AD conversion requires that several important parameters be chosen such that original signals could be reconstructed from digital stream without significant deformation. Two parameters that have largest impacts on AD conversion quality are sampling rate and quantization resolution.

#### Sampling rate

The sampling frequency or sampling rate $f_s$ is defined as the number of samples obtained in one second, or $f_s = 1 / T$. The sampling rate is measured in hertz [Hz] or in samples per second. Theoretically sampling frequency should be higher that twice maximum signal component frequency. In our case, it is impossible to characterize signals that need to be monitored. Higher frequency components on control circuit and phase currents signals are usually generated by fault transients, arcing or contact bouncing. In our cases, we don't need highly accurate measurements of these phenomenons. In other hand, it is important that we are able to detect those features.

Power system fault currents are almost impossible to characterize. They could have large DC and/or high harmonic content. In most of cases, components over $32^{nd}$ harmonic are very small and can be neglected. Converting that into sampling frequency means that sampling frequency over 3840 Hz (60 Hz system) should be satisfactory for phase current measurements.

Contact signals from circuit breaker control circuit are even harder to characterize. Determination of appropriate sampling rate for these signals require different analysis specific for this purposes. If circuit breaker conditioning applications analyze high frequency contact features, high sampling rate is required to capture small oscillations and signal shape during contact transition Figure 6-a. At least few samples are required during transition to be able to capture these specific features. Speed of contact transition is defined by mechanism velocity and contact shape. In most cases, this transition is slower than 0.3ms which sets required sampling rate to 10kHz. Most analysis applications do not analyze very high frequency components because of high noise level. They only require that contact bouncing could be captured from the signal (see figure xx b). In those cases, sampling rate of few (3-5) kHz should be satisfactory.

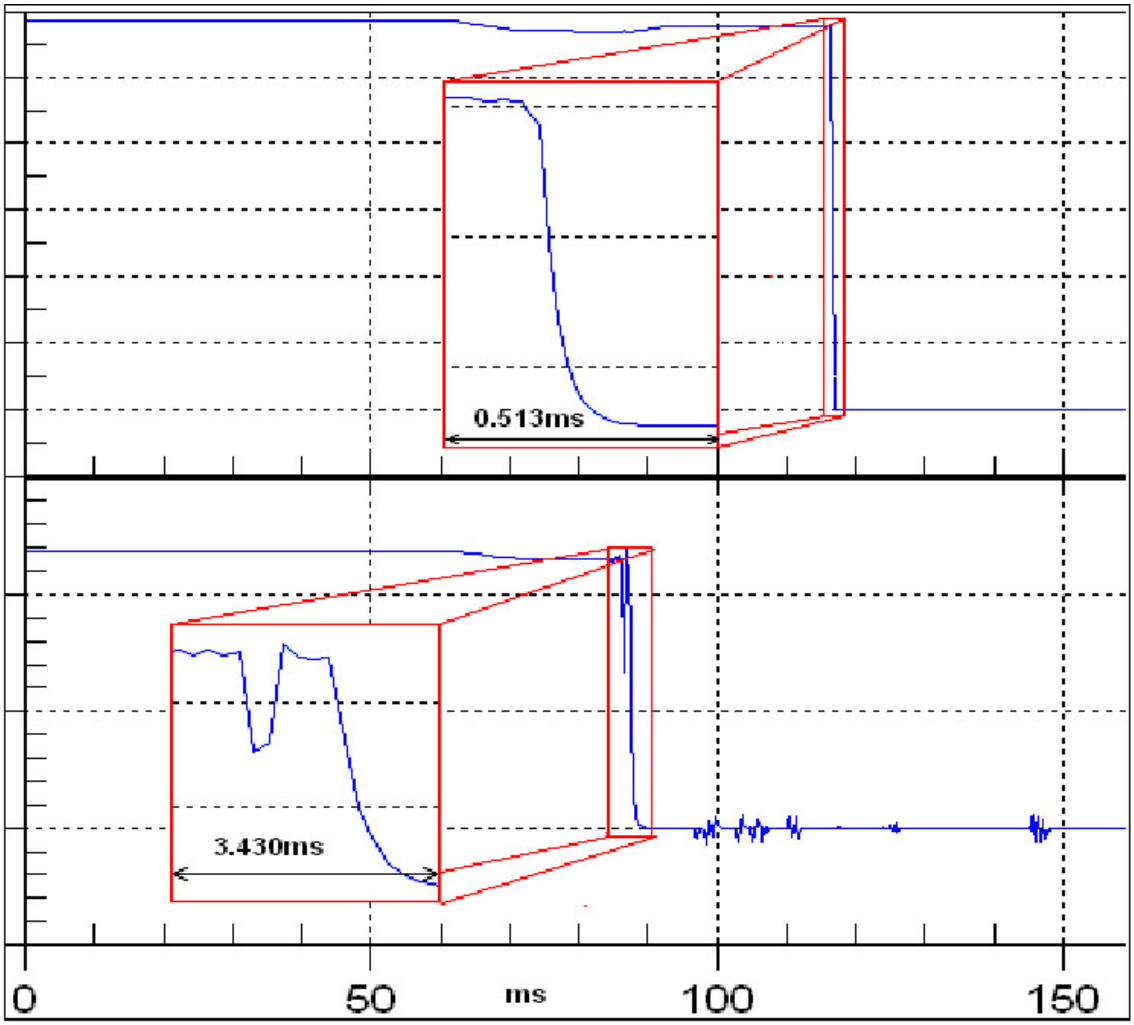


Figure 6. Contact transitions - zoom a) small details b) bouncing

All other signals, Trip and Close coil currents and supply voltages, have low harmonic components and require lower sampling rate. Temperature measurements are very slow changing signals and require very low sampling rate (less that 1 Hz).
It should be considered that some signal processing algorithms require or perform faster if sampling rate satisfies special requirements. Some of the wavelet transformations require power of two samples per one cycle of the signal. Using specific sampling rate signal processing should be able to perform much faster. Required sampling rates should be 32, 64, 96 or 128 samples per cycle, which converted is 1.92, 3.84, 5.76 or 7.68, kHz for 60-Hertz systems and 1.6, 3.2, 4.8 or 6.4 kHz for 50-Hertz systems.

Besides sampling rate very important features is how multiple channels are sampled. There are two ways of sampling multiple channels: synchronous sampling and scanning. AD conversion in both cases may be realized with one AD converter using multiplexer. During synchronous sampling process, all channels are sampled at the same time using multiple sample and hold circuits and than converted one by one – Figure 7.

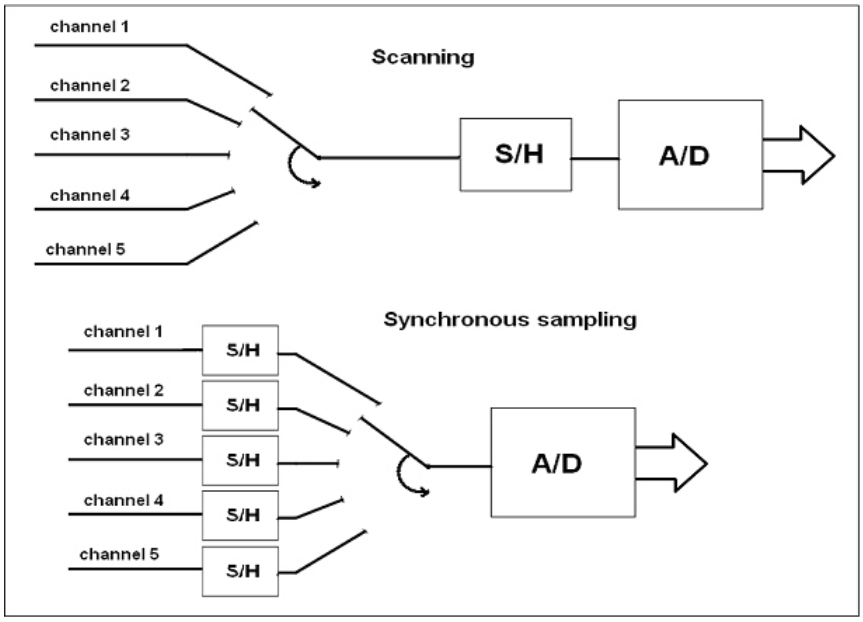


Figure 7. Scanning and synchronous sampling realization using multiplexer

During scanning, channels are sampled and converted one by one using only one sample and hold circuit. For CB monitoring purposes sampling should be done synchronously because signal processing needs to extract timings between different channels. In addition, majority of data formats for signal processing require synchronous sampling. In some cases when sampling and conversion times are much smaller than sampling period, scanning may be satisfactory solution because error would be small.

**Sampling Resolution**

Sampling resolution is also very important requirement. Sampling resolution requirement is directly related to dynamic range of the signals that have to be sampled. Dynamic range is ratio between the smallest and largest possible values of a changeable signal and it's usually expressed in dB. From all monitored signals, only phase currents have large dynamic range. It is very hard to determine dynamic range of the phase currents especially during the fault because it varies with fault type and location. It also depends on line and substation in which breaker is installed.

During the process of conversion, noise is introduced into digital signal. Quantization noise is a noise error introduced by quantization in the analogue to digital conversion process. It is a rounding error between the analogue input voltage to the AD converter and the output-digitized value. The noise is non-linear and signal-dependent. It can be modeled in several different ways [16]. Level of noise introduced by AD converter can be found by:

$$SNR_{ADC}=(1.761+6.02Q)\ dB$$

Where Q is bit resolution of the converter (the number of bits of the converter)

Quantization noise should be much less than value of the smallest signal of interest. In other words, SNR ratio of quantization noise should be much higher than dynamic range of the signal. Analog part of the circuit breaker monitoring should have high SNR.

Phase currents dynamic range is very hard to determine. There are few ways to roughly estimate that value. Usually fault current is 5-20 times higher than load current on the lines. In special cases during bus bar or transformer fault, it could go much over that value. In most cases, even the largest possible fault current is not higher than 50 times nominal load current. Most of the medium and high voltage breakers have rated interrupting currents less or equal to 63kA and nominal currents are usually 1kA [17].

At the same time, analysis applications usually do not require high precise measurements of normal load current. They are more focused on shape and timing of interrupting currents during breaker operation. Current magnitudes could be only used for cumulative breaking current calculation, which is not significantly affected by error on low current measurements. Following Table 2 shows quantization error on the lowest expected current.

Table 2. Quantization error for different ADC resolutions

| Phase Current Dynamic range | | Quantization error on the lowest expected current magnitude [%] | | |
|---|---|---|---|---|
| Signal Ratio | dB | 10-bit | 12-bit | 16-bit |
| 20 | 26.02 | 0.975 | 0.24 | 0.015 |
| 30 | 29.50 | 1.45 | 0.37 | 0.023 |
| 50 | 33.98 | 2.4 | 0.6 | 0.038 |
| 100 | 40.00 | 4.8 | 1.2 | 0.075 |

From the table we can see that 16-bit resolution is satisfactory even for cases much worst than expected. It can also be concluded that 12-bit resolution could be used for purposes of circuit breaker monitoring in most of the cases. Error in case when fault current exceed load current for one hundred times is around 1.2% for 12-bit converter. This accuracy is comparable to accuracy of most CTs and signal conditioning boards, and it could not significantly decrease accuracy of the low current measurement. Quantization errors on high current signals that are more important for condition-monitoring purposes are very low so they can be neglected. It can be seen that 16-bit AD converter satisfy quantization accuracy in all cases, even in very extreme when fault current exceed load current more than 1000 times. In most of cases, 12-bit resolution satisfies accuracy requirements and it could be used for circuit breaker monitoring purposes. Converter with 10-bit resolution

should not be used because it makes large quantization error even for relatively small dynamic range signals [18].

### 3.4 Data Processing Requirements

Circuit breakers are located is substation switchyards all over the system. In some cases, switchyards could be large and located in remote areas. High level of EM noise requires that circuit breaker monitors have to be located very close to breakers or even in breaker control cabinet. Somehow, we need to transfer data from field units to substation control house and finally to central locations such are control center or corporate office. Wireless communication between field monitors and computer in the control house seems to be the best solution for data transfer especially in existing substation where installation of any additional wires or cables is very expensive and require disconnection of the substation for longer period of time. Large amount of data will be recorded during specific fault condition or complex switching operation due to equipment failure such is breaker failure. That amount of data should be saved and than transferred to concentrator in substation control house. Important requirements that have to be satisfied are data storage and communication network requirements.

**Data Storage**

Nonvolatile data storage size should be considered as a very important requirement for monitoring device design. This decision is affected by requirements for monitoring different aspects of breaker operation such as event length, frequency of operations, signal selection and related signal sampling rate and resolution. Size of single event file depends on many factors and it could be estimated for specific case. If we monitor, for example, 16 channels with high sampling rate of 7kHz with 16-bit resolution and record files which last 1 sec file size should be around 225kB. In all cases, one event file would be less than 500kB. Another consideration should be availability, capability and reliability of online data transfer function of the monitoring system. System should be capable of keeping relatively small number of event records if data transfer became busy or if it even fails. Sometimes, under some special conditions it is possible that large number of events happen in a substation. Field units should be able to keep all recorded events until transfer to concentrator in control house completes. If we want to secure that files will not be lost during network failure, data storage size on field units should be able to keep few dozens of records. Translated to memory size, that means that nonvolatile storage should be at least 16MB. Size of data storage should also be flexible to enable adjustment to particular cases. In some cases data transfer could be burden due to number of breakers or high EMI. In those cases, memory should be large to enable slower transfer to concentrator.

Data storage should have fast data transfer capability to support large data volume due to large number of sampling channels and high sampling rate. There are new technologies, which offer large low cost nonvolatile memory with simple, fast and standardized data transfer. All different kinds of flash memory devices are available and should be consider

for this purposes. Secure Digital Card memory provides up to 4GB of low cost memory with fast three-wire SPI communication protocol.

Data storage capacity on the concentrator side in substation control house should enable storage of large amount of data generated over long period. Some breakers operate rarely - few times a year, but there are circuit breakers (for example, breakers on capacitor banks), which could operate few times a day. System should be able to keep tens of thousands of record in file repository, which converted to memory size is few GBs. It should be also considered that data should be protected from loss. Some kind of redundant data storage should be on site and even remotely.

## Data Transfer and Communication

Data transfer from field units installed at circuit breakers in a switchyard is could be very difficult. Even that we need to transfer relatively small amount of data over relatively short distance some specific circumstances create this difficulty. Very high level of electromagnetic interference, need for GPS signal distribution, multipoint communication with dozen of points, expensive and time limited installation are some of the features that require specific communication network. Data transfer to a central place should be very flexible to enable easy implementation in all possible situations. Sometimes there is a need for over twenty communication points in one substation. In those cases, we also need faster data transfer to enable data transfer from all devices in real time. Communication networks, which require cooper or optic fiber cable installation between switchyard and control house, are not good idea. Those networks require expensive and long installation that is not suitable in substation because substation has to be offline over long period.

Wireless data transfer from substation switchyard to control house seems to be the best choice because it does not require wire installation in the switchyard. Data transfer speed is not critical because data are not used in real-time control applications. Considering recordings size and number of units in the switchyard data rate of 115 or 256 kbps should enable relatively fast data transfer. Using suggested data rate data transfer from one unit will last few seconds, which meets requirements even for relatively fast applications such is alarm processor. There are several technologies, which can be used for this purpose: Frequency Hopping Spread Spectrum (FHSS), ZigBee, Wireless, and LAN etc. Some of them are more suitable for harsh environment and short distances. In addition, several configurations could be used for this network. Multipoint and Mesh network configuration – Figure 8, are most suitable for circuit breaker monitoring communication.

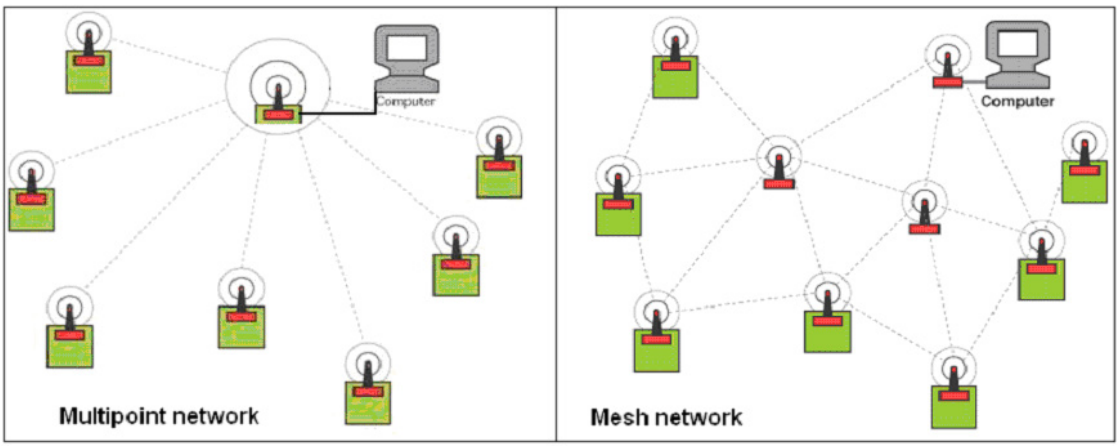


Figure 8. Multipoint and Mesh network configuration

Because of high level of EMI, output power of transmitters should be higher than power required for normal outdoor application. Transmitter's Equivalent Isotropically Radiated Power (EIRP) in multipoint network configuration should be around 60mW (18dBm) for 2.4GHz frequency range [19]. In some countries maximum allowed power is limited to 10dBm or 12dBm so gain antennas and repeaters could be used to enable longer distance communication. Mesh network configuration requires larger number low power transmitter, which makes it very reliable because of multiple transfer paths through the network. Mesh network transmitters are relatively cheap and easy to use which makes them good solution for circuit breaker monitoring purposes. Network should also have implemented error detection and error handling mechanism. Encryption should be considered as an options but it should not overburden microprocessor of the field unit. Sometimes encryption algorithms are even implemented in wireless transceivers so that could be easily used.

**Data Format**

Recorded signals should be recorded in suitable standardized data format, which enables transfer of all available information. Format should be supported by third parties that could create different analysis applications based on circuit breaker monitoring recordings. Output data format should be one of the available open standard data exchange formats introduced by IEEE or IEC. There are several standardized data exchange formats available for transient power system data exchange. The most appropriate formats are "C37.111-1999 IEEE COMTRADE Standard (Common Format for Transient Data Exchange) for Power Systems" (1999) [20] and XML based "IEC 60255-24 Common Format for Transient Data Exchange (COMTRADE) for Power Systems" [21] (2001). There are two versions of COMTRADE 1999 file format: ASCII and BINARY data format. Binary data format is more suitable because of higher level of data entropy rate. For example, using universal lossless data compression LZW algorithm [22], ASCII file can be compressed to the average level of 10% but the same BINARY file to only 55%. All this makes binary COMTRADE format most suitable file format for circuit breaker monitoring data transfer and storage.

### 3.5 Signal Processing Requirements

Some signal processing analysis algorithms could require specific number of signals, sampling rate or resolution. However, to be able to perform multiple breaker operation analysis data from all circuit breaker monitor devices must be synchronized in time. To enable multiple breakers signal processing and analysis system has to be designed as distributed signal processing system shown in Figure 9.

In distributed signal processing systems, every node samples analog signals by its own A/D converter. Sampling is controlled by autonomous clocks, which are generally not synchronized. In order to ensure synchronized operation among the different nodes of the distributed system, both the drift of these clocks, and the jitter of the sampling must be handled. In this kind of system configuration time stamping should provide method for signal alignment in cases when data transfer is not continuous and when data transfer delay cannot be controlled. Almost no standard wireless network technologies today have these capabilities.

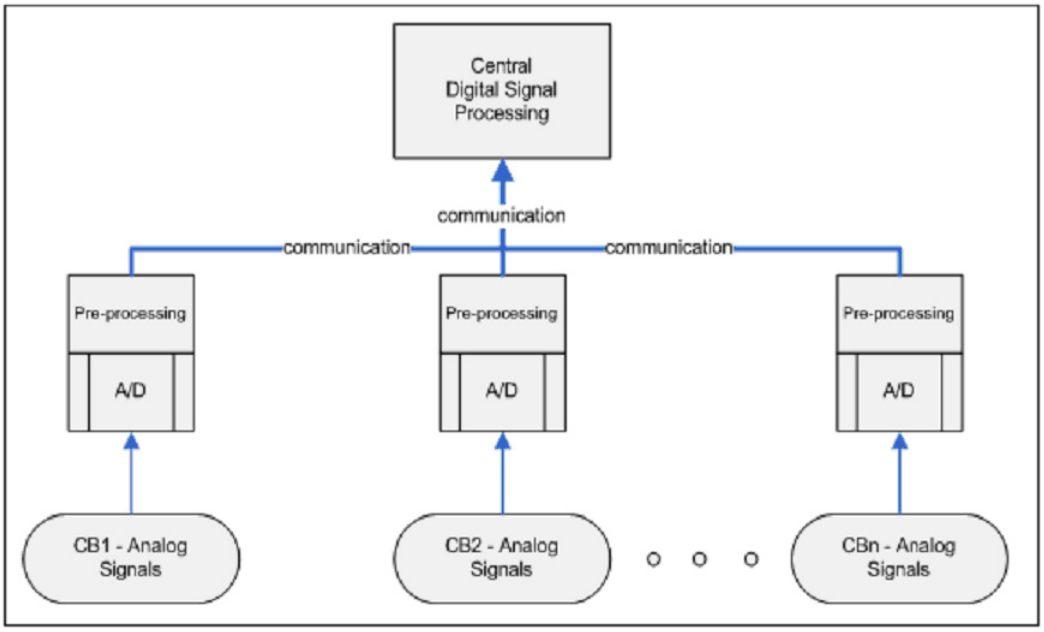


Figure 9. CBM System as Distributed Signal Processing System

For multiple breaker operation analysis and system-wide applications, online circuit breaker monitoring system should be designed as distributed signal processing system, which comprises numerous acquisition nodes which are interacting with central processor to perform data acquisition and signal processing. The nodes should perform online data acquisition and signal pre-processing. The input data for this system are digital samples of a discrete signal, usually sampled at the same clock rate.

Central processors and data acquisition units have separate clocks, which may hurt data consistency constraints, due to their jitter and drift. This system should have event based

data transferring and pre-processing so all samples should be time-stamped to enable signal alignment before processing in a central place [23]. This problem does not exist in centralized, one-processor, one-data acquisition systems, as generally these have only one master sampling clock that schedules and controls the sampling processes.

The field of distributed signal processing is not a well-explored area, so after the examination of this complex problem, the most cost-effective solutions is proposed. This system uses GPS clock signal to synchronize all nodes in the system. Every sample captured all around the system need to be sampled at the same time and stamped with common time stamp.

At the central processor side, which performs signal processing and analysis, all signals can be aligned. Using this, we could avoid expensive real time data transfer networks. Nature of our task is very specific and does not require real time data transmitting. Instead, it's event based recording process, which requires time synchronization. Using signal alignment technique, we are able to reduce these requirements and at the same time perform quality time analysis. Preprocessing on remote nodes is necessary to perform event recognition and time stamping. Event recognition is used to catch all events of interest. For circuit breaker monitoring purposes, event recognition implies determination of breaker trip and close signal change because all breaker operations are initiated buy sending one of those two signals. It is also necessary for analysis to record signal status before breaker operation – Figure 10.

This part of captured waveforms is called pre-event recordings and it's used to determine circuit breaker status and control circuit condition before operation. Pre-event recording is usually done using circular buffer.

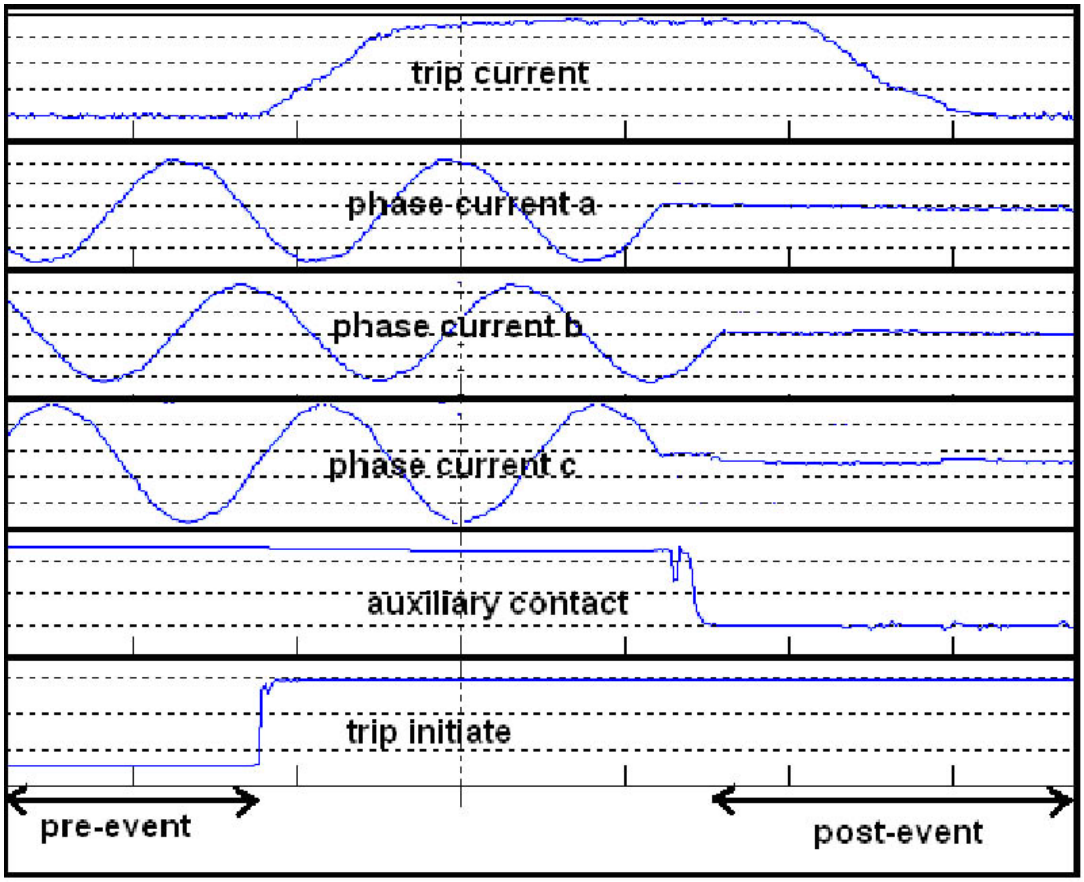


Figure 10. Pre and post event recordings

All samples are temporarily stored in circular buffer which overwrites the oldest samples when reaches end of the free space. When event happens all data from buffer are being stored to memory as well as new samples captured during event. Length of this period is usually fixed to be few fundamental frequency cycles. Total recording length should be large enough to capture all necessary information but at the same time as small as possible to avoid long data transfer and storage congestions. High voltage transmission circuit breakers usually need 2 to 3 cycles to operate breaker. Medium and low voltage breakers could need up to 10 cycles to interrupt current. In all cases, total length of recordings does not need to be bigger than 20 cycles. During autoreclosing operation of the breaker, event signals will be reinitiated and monitoring device will capture that event as a new recording.

### 3.6 Time Synchronization

To perform multiple breaker or system wide analysis, signals collected in remote places should be processed simultaneously. In distributed signal processing systems, a problem arises when two or more acquisition nodes have asynchronous clocks. All corresponding samples should be processed at the same time to be able to analyze or track simultaneous events. This can be achieved in such a way that all samples of real-time discrete signals should arrive to digital signal processor at the same time. This solution requires fast and

wide bandwidth communication between nodes and central place, which makes it unsuitable for our application.

Circuit breaker analysis requires data recorded only during events (CB opening or closing). This means that continuous data (samples) are not required and instead, sequence of samples can be recorded and stamped with corresponding time and than transferred to central place for processing and analysis. This kind of data transfer relaxes requirements for communication channel and decreases cost of device. However, it requires that local and central clocks work synchronously and have the same absolute time. Crystal oscillators usually control the sampling and time stamping at all nodes. Frequency deviation of such clocks is typically 20-50 ppm, which in relatively short period can create synchronization problems.

First problem is that signals at two different ends would be sampled in different times, which makes it impossible to perform some of necessary signal processing operations. Second, after some time these sampling frequencies are not exactly the same at the all nodes, as the two crystals are not identical. Therefore, the data recorded at the nodes is not consistent, as during a certain period the one node device produces different number of samples than the number of samples expected or produced at another. This means that all clocks in the system should be synchronized to one common clock source as shown on Figure 11.

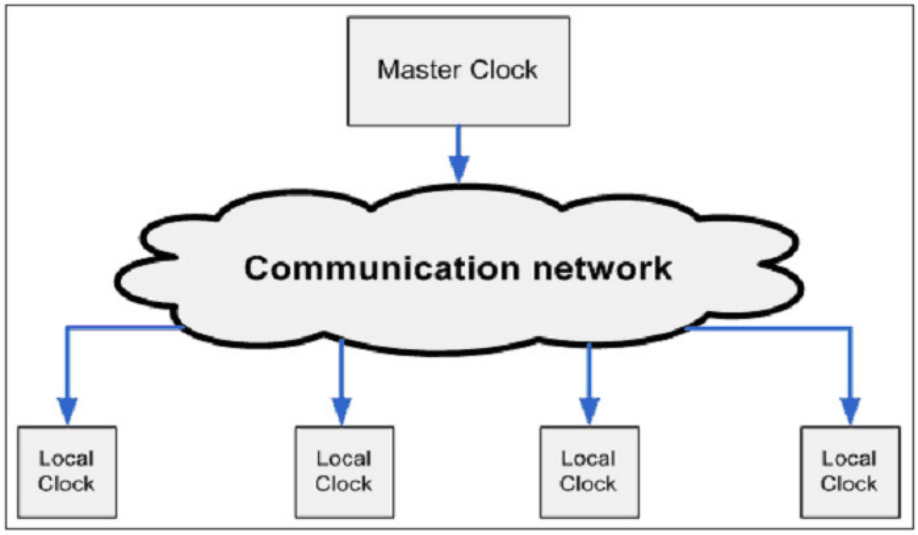


Figure 11. Time Distribution Architecture

Synchronization parameters that affect quality of time synchronization are:

- Latency (responsiveness) – affects sampling time by introducing different latency in clock signal distribution
- Resolution (steadiness) – makes sampling frequency at various nodes different
- Update rate (smoothness) – relates to both previous problems during period between time updates

To be able to perform adequate processing and analysis all three parameters should be in the range of tolerance, which satisfies requirements imposed by signal processing algorithms. It is very hard to specify these requirements because on large number of existing signal processing algorithms which could be used during signal analysis. In general, it is possible to give estimates, which will guarantee requirements for most of algorithms. First, we should consider signal parameters that could be affected by synchronization.

Time synchronization is widely used in several power system applications. Some of them require good time synchronization (fault location, relaying) and some are not so sensitive to time drift. Table 3 shows some power system timing requirements [24]

Table 3. Power System synchronization requirements

| System Function | Measurements | Optimum Accuracy |
|---|---|---|
| Fault Locator | 300 meters | 1 microsecond |
| Relaying | 1000 meters | 3 microseconds |
| Stability Control | ±0.1-1 degree | 4.6- 46 microseconds* |
| State Estimation | ±0.1-1 degree | 4.6- 46 microseconds* |

* calculated for 60 Hz system

Specific requirements for breaker monitoring are not simple to determine because there is no measurement error requirements related to circuit breaker monitoring. However, there is a way to estimate these values. Most important information extracted from control signals from circuit breaker control circuit are timings and signal shapes related to breaker mechanical and electrical operations. These timings could be used to create breaker signature, which should be compared with referent values or previous recordings to determine breaker condition. There is no need for extraction of current phasors from the recorded signals because measurements from circuit breaker monitoring system should not be used in power system analyses. Those measurements are usually taken during power system transients from non-precise transducers in very noisy environment. Current timings, magnitude and waveform shape could be used for condition and operation analysis purposes. This means that there is no need for high synchronization requirements related to signal phase error but specific timings calculated from recorded waveforms should be precise. Maximum timing accuracy that is possible to extract from contact or coil current signals is equal to duration of the sampling period. It is not possible to detect anything between two samples because of unknown shape of the signal. Similar analysis could be applied for all circuit breaker control signals. Higher accuracy of the phase signals will not improve analysis because those signal timings are used in addition to other timings from the control circuit. Beside this, waveforms are usually recorded during system transients, which distort current waveform shapes and introduce additional error.

After all, we can conclude that time synchronization latency should be less than half of sampling period; translated to time that is 50 - 250 microseconds depending on used sampling rate. Fifty microseconds requirement should be enough to satisfy requirements on most of monitoring devices. Besides this requirement, we need to specify steadiness

and update rate requirements. Both those requirements are related to frequency deviation of the local clocks. Standard quality quartz clocks are usualy warranted to have a long-term accuracy of about 10 ppm at 31 °C. Considering temperature variation in a substation, quartz oscilators used in electronic applications usualy have a frequency stability of 20-30 ppm and an aging rate of 1-2 ppm per year [25]. Based on this we can conclude that in most cases stability is beter than 40 ppm. From this we could see that combined time synchronization accuracy and update rate multiplied by stabilty should not go over time synchronization requirement.

$$\frac{2}{f_s} > time_sync_accuracy + update_rate \bullet oscilator_stability_{\mathrm{F}}$$

or example, if we use update rate of 1PPS (one pulse per second) and oscillator with stability of 40 ppm we need time source with accuracy of at least 10 microseconds to achieve synchronous sampling on 10kHz. If we use sampling rate of 7.68 kHz we need time synchronization source with accuracy better than 25 microseconds. Time source accuracy of 20 microseconds will satisfy most of requirements high sampling rates.

There are several referent time sources of synchronizing signal available for industrial purposes. From Table xx, which shows most common sources, we can see that only few of them could provide required accuracy [26].

Table 4. Sources of Synchronizing Signals

| Time | Transmit freq. | Time Code | Susceptibility | Primary Use | Resolution | Location |
|---|---|---|---|---|---|---|
| **AM** | | | | | | |
| WWV | 2.5-20Mhz | BCD/1PPS/ IRIG | Fading, Propagation | Time | 5ms | US |
| WWVB | 60kHz - c shift | BCD/IRIG | Atm. Noise | Freq. Time | 2ms | US/Canada |
| OMEGA | 10-14kHz | IRIG/BCD/ 1PPS | Noise | Navigation | 1-10ms | Worldwide |
| MSFDCF | 60kHz - c shift | IRIG-B/TTL | Noise | Time | 1-10ms | W. Europe |
| Loran-C | 100kHz | 1PPS | PLC, Noise | Navigation | 20μs | N. Hemis |
| **Spread Spectrum** | | | | | | |
| IS-95 (CDMA) | 869-894 MHz | ASCII, 1PPS | Network vicinity | Phone, Time | 10μs | America, Asia, Australia |
| **Satellite** | | | | | | |
| GOES | 468 MHz | IRIG/TTL | Loss of satellite | Weather, Time | 100μs | W. Hemis. |
| GPS | 1575.42 MHz | IRIG,1PPS, RS232 | Lock on few satellites | Time, Position | 0.2-0.5μs | Worldwide |

Considering our requirement only two of them will be discussed: GPS (Global Positioning System) and IS-95 CDMA (Code division multiple access).

### The Global Positioning System (GPS)

The Global Positioning System (GPS) is currently the only fully functional Global Navigation Satellite System. Utilizing a constellation of at least 24 medium Earth orbit satellites that transmit precise microwave signals, the system enables a GPS receiver to determine accurate and precise time, its location, speed and direction. It uses very precise time references to enable positioning. That time reference could be used for time synchronization between remote devices on the earth. Developed by the United States Department of Defense it is managed by the United States Air Force 50th Space Wing. Despite this fact, GPS is free for civilian use as a public good. GPS provides a precise time reference with accuracy of 0.2 – 0.5 microseconds to UTC atomic clock [27], [28].

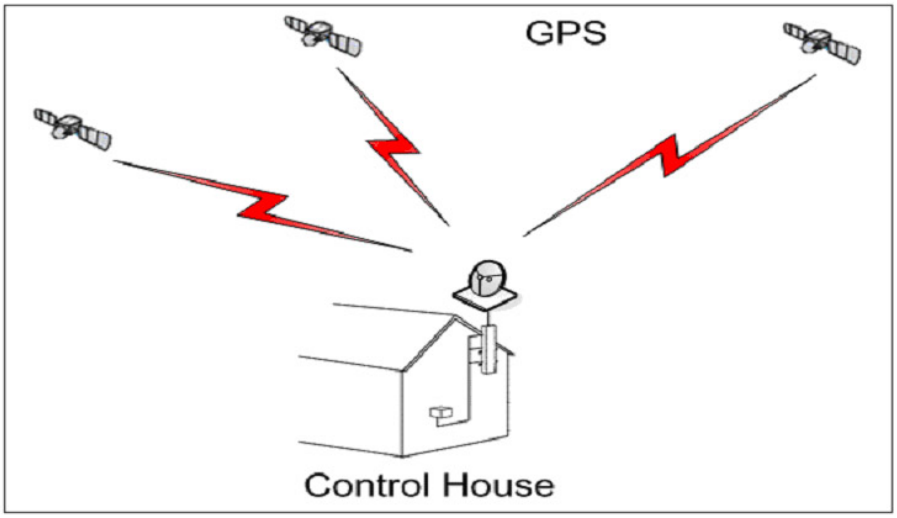


Figure 12. GPS Time synchronization

GPS time synchronization is used in many applications including scientific study of earthquakes, synchronization of telecommunications networks and other industrial purposes. Signal is available worldwide but requires open sky access for antenna - Figure 12. In some urban areas, that could be a problem because some substations are located indoor to reduce the noise from the transformers, and for reasons of appearance.

Since GPS signals at terrestrial receivers are relatively weak, it is easy for other sources of electromagnetic radiation to disrupt the receiver, making acquiring and tracking the satellite signals difficult or impossible. Solar flares are one such naturally occurring emission with the potential to degrade GPS reception. Man-made interference can also disrupt, or jam, GPS signals. Even intentional jamming is possible.

Outputs interfaces from GPS clock receivers are many and vary with vendor but there are two required outputs. The fist is a precise digital output (1PPS) with 50-nanosecond rise time that occurs once per second. The second is an ASCII message transmitted at 9600 baud that identifies the year, day, hour, minute and second of the digital output. The

output pulse is non-standard between manufacturers of these devices, and the timing edge can be the rising or the falling one, depending on the manufacturer. The time code could be unique to manufacturer or one of the standardized codes. Inter-range instrumentation group time codes, commonly known as "IRIG" time codes [29], were created by the TeleCommunications Working Group of the Inter-Range Instrumentation Group, the standards body of the Range Commanders Council. The different time codes defined in the Standard have alphabetic designations. A, B, D, E, G, and H are the standards currently defined. The main difference between codes is their rate, which varies between 1 pulse per second and 10,000 pulses per second. Most common is one pulse every 100 seconds synchronized on the hour, IRIG-B. The time code transmitted in ASCII format in the following sequence: Year, day of year, hour (24 hour day), minute and second.

GPS system is free for use and relatively reliable which makes it very suitable for time synchronization in power system applications on all places with open sky availability.

### IS-95 CDMA

In some indoor urban substations roof access in not available or antenna installation is very expensive. In that case, other time synchronization systems should be used instead of direct GPS. All CDMA receivers receive transmissions from base stations. This system requires a means of synchronizing the base stations throughout the network so that neighboring cells do not interfere with each other. The base stations are synchronized using Global Positioning System (GPS), which is itself a CDMA-based system. The base station time synchronization must remain within 10 microseconds of GPS time over periods as long as twenty-four hours during which GPS satellite signals might not be available. CDMA time receives the same initialization signals transmitted by the base stations that are used by the mobile telephones to establish their synchronization to system time [30], [31]. This means that during normal operation, the quality of the timing information being transmitted from each of the base stations is virtually a repeat of that directly obtainable from the GPS. Due to the nature of the IS-95 spread spectrum CDMA modulation scheme, this timing information may be extracted by a well-designed receiver with a precision of hundred nanoseconds. The big difference between GPS and this system is that the received signal strength from the base stations are a minimum of 30 dB larger than those from the GPS satellites, which makes possible to receive it indoor.

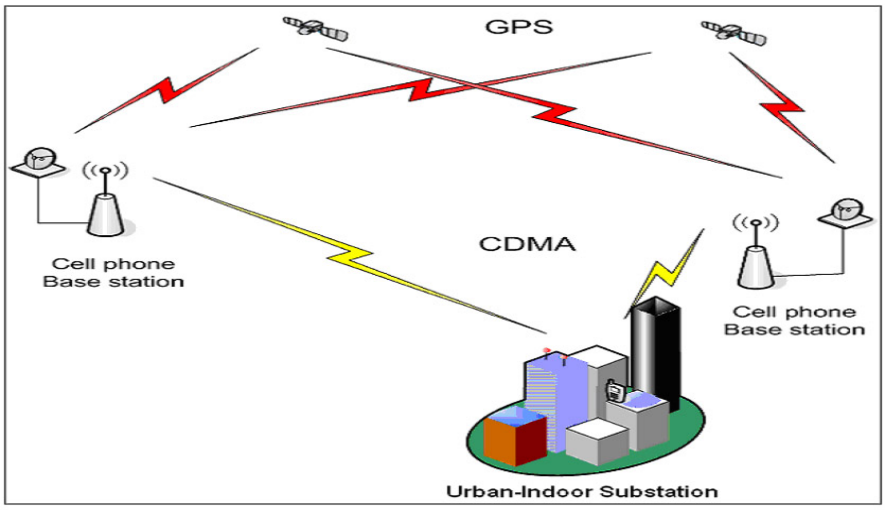


Figure 13. CDMA Time synchronization

This feature makes this system very suitable for application in urban areas where GPS signal is not available or reliable but usually covered with good CDMA signal – Figure 13.

### Substation Time Distribution

To decrease monitoring system cost and avoid multiple antenna installation in the switchyard we should use one time receiver per substation and than distribute time reference using existing communication network. The same time reference signal should be transmitted to all monitoring units in the switchyard. Communication network and protocol used for data transfer between field units and concentrator PC can be easily used for time code distribution. Time reference distribution could be achieved using wireless network or using existing DC supply wires between control house and circuit breakers. Some transmitter vendors [32] already support 1PPS signal distribution feature with accuracy of 10-20 microseconds. This means that using existing equipment necessary for data transfer we are able to reduce number of time receivers to one per substation.

## Temperature measurement

Three temperature values could be useful in circuit breaker condition analysis: ambient temperature, control cabinet temperature and contact/tank temperature. Monitoring the ambient temperature may also be considered as an elementary or trivial piece of information, but this information is needed to detect deviations from the historical operating characteristics of the circuit breaker under similar conditions to those being monitored.

Control cabinet temperature is related to operation of space heaters used to control temperature of the control circuit. Their function is simple and yet their failure may cause

significant problems. Monitoring the integrity of the heater elements is a rather trivial task that can be done by simply circulating continuously a very small current. Another alternative is to use sensor that is strategically located in close proximity to the heaters. One disadvantage of this method is that heaters are not energized all the time but only when the ambient temperature drops below a certain level and consequently a logic circuit that relates ambient temperature to control cabinet temperature should be provided.

The temperature at or near the main contacts can be a good indicator for a number of possible potential problems with the circuit breaker. Large changes in contact temperature may be due to broken contact fingers, excessive burning of the main contacts, material degradation, oxide formation, weak contact springs, or even an improperly or not fully closed circuit breaker. The temperature of the contacts or the conducting parts can be measured directly using optical methods, or else it can be approximated by measuring the temperature of the surrounding gas (tank), of the ambient temperature and of the continuous current that is being carried. Knowing the normal temperature rise of the circuit breaker the corresponding temperature at these particular conditions can be calculated. The results then can be compared with what is expected from this circuit breaker based on previously obtained development data.

Measurements should be performed using simple temperature sensors available on the market. They have simple interface, usually current proportional to temperature value. Ambient temperature should be measured close to circuit breaker but sensor should not be directly connected to metal construction of the breaker. Sensors also should not be directly exposed to sun. Control cabinet temperature should be measured inside of the control cabinet but sensor should not be directly exposed to heaters. Measurement of the contact/tank temperature could be not simple task. For most of the old breakers installed in the utilities, it is very complex task to put sensors inside of the tank. In those cases, temperature should be measured outside by placing sensors directly to contact tank with good temperature contact. This could be done using temperature conducting glue or grease for heatsink. Sensor also should not be exposed to direct sunlight.

Range for temperature sensors should be industrial: form –50C to 100C degrees.

# 4. SYSTEM ARHITECTURE

## 4.1 Introduction

Architecture of the online circuit breaker monitoring system should enable realization of all proposed requirements, as well as fast, easy and inexpensive implementation of future requirements. It is very important that the system is modular so those users have value of installation of only one unit to a substation as well of several dozens of circuit breakers in one substation as needed. This feature should enable gradual installation of circuit breaker monitors over the longer period. With installation of additional units, benefits from the system will increase. It is also important that cost of the solution and its installation remains very low to impel system wide installation. That will gain benefits to the system wide applications such as topology processor or state estimator.

## 4.2 Hardware

To enable low-cost production and installation and gradual deployment, the circuit breaker monitoring system needs to be divided into: field acquisition unit, located near the breaker, computer located in control house, which serves as data concentrator and communication network between them – Figure 14. This architecture does not require complicated and expensive installation and additional wiring in existing substations. Time synchronization should be also achieved using these system modules. Additionally this architecture should enable data access from remote places such as control center or corporate office.

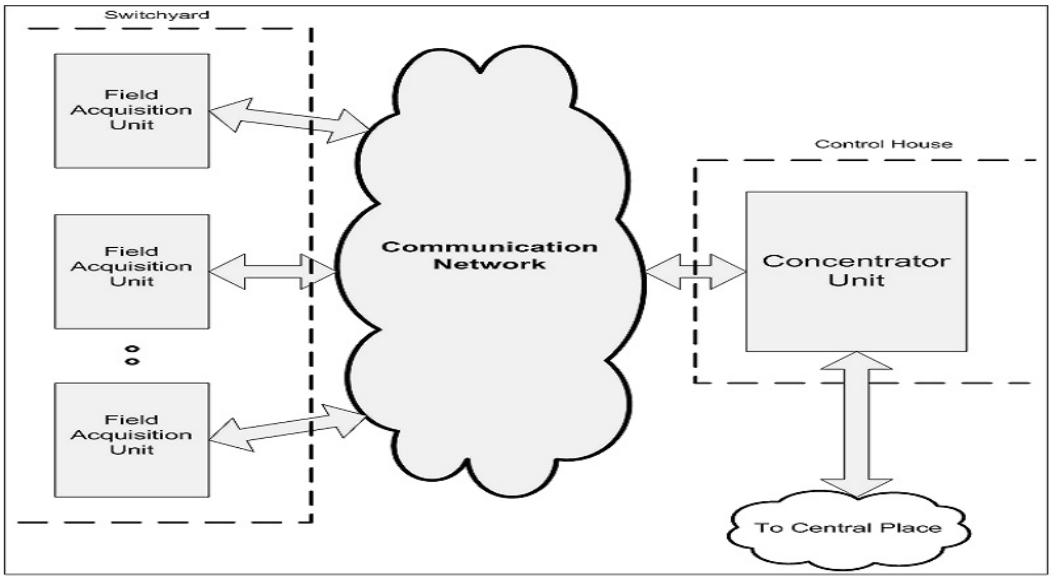


Figure 14. CBM System Architecture

Technology used for CBM realization should be proven and such that remains available over longer period. Technology has to be reliable and able to work in very harsh environment such as substations characterized with extreme temperatures and high level of electromagnetic interference (EMI).

### Field Acquisition Unit

To enable easy upgrade and to simplify designing problem we accepted modular approach. Modular approach allows us to create separate modules of field unit. Each of them should be independently designed, while integration of all modules implements requirements given in previous section. Considering nature of the input signals and suggested requirements, there should be three separate modules – Figure 15:

- Module for signal conditioning and overvoltage protection
- Module for data acquisition, signal preprocessing, storage and synchronization
- Communication module

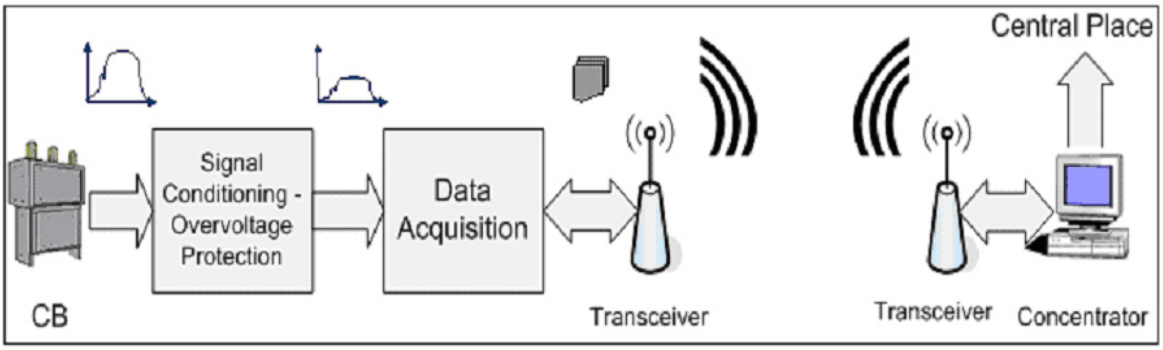


Figure 15. Modular structure of the field unit

Signal conditioning and overvoltage protection module has to provide appropriate voltage levels for data acquisition..

Table 5. Circuit breaker control signals

| Signal Name | Channel | Type | Nominal Range |
|---|---|---|---|
| Supply Voltage | Voltage | Contact | 125V ± 15V |
| Aux. Contact B | Voltage | Contact | 125V ± 15V |
| Aux. Contact A | Voltage | Contact | 125V ± 15V |
| Close Coil Current (3 phases) | Current | Shunt | <10A (sec.1V) |
| Trip 1 Coil Current (3 phases) | Current | Shunt | <10A (sec.1V) |
| Trip 2 Coil Current (3 phases) | Current | Shunt | <10A (sec.1V) |
| Phase A Current | Current | CT | ~5A (sec.1V) |
| Phase B Current | Current | CT | ~5A (sec.1V) |
| Phase C Current | Current | CT | ~5A (sec.1V) |
| Close Initiate | Status | Contact | 125V ± 15V |
| Trip Initiate | Status | Contact | 125V ± 15V |
| 'X' Coil | Status | Coil | 125V ± 15V |
| 'Y' Coil | Status | Coil | 125V ± 15V |

Voltage levels of signals at circuit breaker could be as high as 130VDC or low as 10 mV with transients over 1000V. Since voltage range of the signals at the input of the analog to digital converter is always standard value (±1, ±3.3, ±5 or ±10V), this module should scale all input signals to required value. It should also protect circuit from transients.

Second module is data acquisition module, which consists of analog to digital converter and microprocessor board for data acquisition, preprocessing, storage and time synchronization. This module performs and controls data sampling, monitoring and when the event occurs, recording and storage of all input signals. System has to continuously sample all input signals and keep specified number of samples in temporary memory.

There are several technologies, which enables low cost and simple implementation of these tasks. Digital Signal Controllers (DSC) provide integrated AD converters, programmable timers, relatively large program and data memory with DMA support and variety of communication modules which makes them suitable for implementation. This module needs to be also connected to the wireless communication module. It should communicate with concentrator computer using custom higher-level data protocol. It also receives GPS synchronization signals and data from the master unit and synchronizes the local clock and recording accordingly.

Communication module needs to enable reliable communication between field units and concentrator. If we look into cost and requirements for data transfer speed and distance, frequency hopping spread spectrum (FHSS) [33] and ZiggBee [34] technologies look like good choice. This module has to enable relatively fast data transfer and transfer of time

synchronization signals and data. Transceivers should be immune to high level of interference in a substation switchyard.

### Concentrator Unit

As we can see from proposed architecture only one concentrator unit is needed per substation. This unit gathers data from all field units through wireless communication, stores data, performs data pre-processing and enables remote access of the data. This part of system consists of several modules. First and most important is computer module. This module needs to process incoming data and control the functioning of the complete system. This computer executes signal and data pre-processing software which analyses and stores data received from field units. The processor is connected to two devices. One device is a wireless transceiver, which allows it to communicate with the field units to acquire the data. Another device is a time receiver, which provides accurate time signals. The processor should also be connected to a network, like Internet, to allow information and data transfer to central place. Personal computer (PC) looks as an ideal solution for concentrator implementation.

## 4.3 Software architecture

Software architecture should follow similar structure as hardware. It has to be modular and hardware independent. Software architecture should be based on data flow in the system - Figure 16. Generally, system could be divided into two parts: data acquisition software running on field unit and applications running on concentrator. Important part of the software solution is wireless communication protocol between field units and concentrator computer. It has to implement all necessary functions without overburdening communication network. Communication from contractor to central place or other substation device has to be implemented using Internet communication protocols to enable fast data transfer from substation.

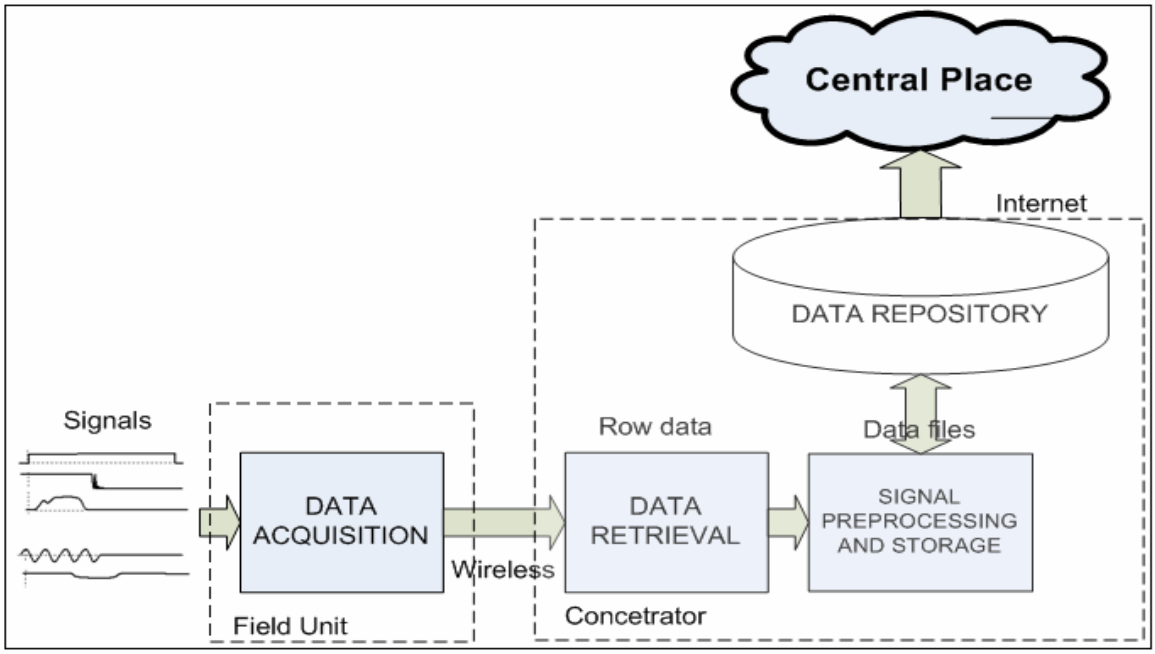


Figure 16. System architecture based on data flow

Platform independence requirement could be completely implemented on concentrator side using middleware or platforms.

### Data acquisition software

Data acquisition software should run in real-time environment because of the nature of tasks. It needs to continuously sample input signals and check for new events. Field units need to record pre-event part of the recording. This could be done using software circular buffer. This feature enables capturing of pre-event input signals, which are necessary for signal processing and operation analyses. Samples are stored in buffer as they are taken from AD converter. Pointer is used to point to next available space in the buffer. That pointer is incremented after every data transfer from AD converter to buffer. When pointer reaches last position in buffer, instead of going to next position (which doesn't exist) it goes to first position again. If buffer size is large enough, providing that the application takes data from buffer before they are overwritten, this is very efficient way of temporarily storing data. While nothing interesting happens, samples are being stored in buffers and overwritten after certain period. It is very important that application notices event and transfer samples to nonvolatile memory prior to overwriting.

Data acquisition software also needs to perform time synchronization in real time environment. It also needs to control all acquisition parameters and data transfer to concentrator.

Central part of the data acquisition software is module, which prioritizes the tasks that software must perform. Since, there are several real-time processes running on the same

processor. The module is responsible for controlling the flow of the system algorithm. It must detect events when they happen and activate the appropriate routine to perform required action. Direct Memory Access (DMA) module available in the core of the controller helps to relax number of real-time tasks running on the processor. Communication protocol between field unit and concentrator should enable data transfer, time code transfer and remote setting control of the field unit. It should also enable device setting setup through local communication port. In most cases, number of field units will be less than a dozen. However, protocol needs to enable communication between several dozens field units and concentrator.

### Concentrator Software

The data retrieval software performs the following functions:

- Receive data from all field units and create data file
- Allow configuration of the field unit
- Perform time synchronization between clock connected to it and all field units
- Provides an easily accessible data interface for other applications

This software is also event driven. It handles three types of events: those generated by the user, GPS clock, and by the field unit. User events include configuration of the field unit and field unit events include data transfer request. Concentrator controls field units by sending commands to specific unit. It also responds to data transfer requests form field units and creates files in specified format from data received from the field. Data files generated by data retrieval software are later provided to higher-level software applications.

Rest of the software running on the concentrator side should be independent of circuit breaker monitor system. It could be part of substation data integration application or even specialized third-party software. That application should enable data validity checking and efficient storage. It should perform file renaming following IEEE file naming convention [35]. This enables efficient file storage and database indexing, sorting and searching. It should also perform data analysis to find and eliminate invalid data. That application also needs to enable easy data transfer between local substation and central place. Analyses applications, which perform circuit breaker condition analysis or breaker operation and status analysis, could be installed locally, in a substation, or centrally in control center or corporate office.

# 5. CONCLUSION

This document describes function of the online circuit breaker monitoring system and presents requirements that such system should satisfy to enable efficient and cost effective circuit breaker monitoring function. It should be designed for condition monitoring as well as status monitoring purposes for the medium and high voltage circuit breakers. By following these requirements, it should enable to realize low cost and efficient monitoring and provide data that could be used to improve several power system analysis functions. This document focuses on requirements that data acquisition system should satisfy to be able to monitor set of signals that enable quality analysis. It also provides time synchronization requirements that should be satisfied to enable system wide analysis of the recorded data.

It gives generic system architecture that should enable low cost realization of the system. Hardware architecture should be modular to enable easy and effective upgrade and obsolete part exchange in the future. Software architecture should provide data recording and data management system that could be incorporated in data integration and monitoring systems currently available in utilities companies.

## REFERENCES


[1] ANSI / IEEE C37.100-1981, Definition for Power Switchgear

[2] Controlled switching: a state of the art survey. Part 11, Electra 164, TF 13.00.1: 39-69, Feb. 96.

[3] Maintenance of Power Circuit Breakers – Volume 3-16, United States Department of the Interior Bureau of Reclamation, Denver CO, 1999

[4] "Final report on results of second international enquiry into circuit breaker reliability," CIGRE Brochure 83.

[5] Ruben D. Garzon, High Voltage Circuit Breakers - Design and Application, Taylor and Francis, New York 2002

[6] Bosma and R. Thomas, "Condition monitoring and maintenance strategies for high-voltage circuit breakers," in IEE 6th International Conference on Advances in Power System Control, Operation and Management (APSCOM-2003), vol. 1, Hong Kong, Nov. 11-14, 2003,

[7] H.K.Hoidalen, M.Runde, O.Haugland, G.Ottesen, and M.Ohlen ,"Continuous monitoring of circuit breakers using vibration analysis," in Eleventh International 81 Symposium on High Voltage Engineering, vol. 1, London, Aug. 23-27, 1999,

[8] M. Runde, T. Aurud, L.E. Lundgaard, G.E. Ottesen, K. Faugstad, Acoustic Diagnosis of High Voltage Circuit Breakers, IEEE Transaction on Power Delivery vol 2 No 3, July 1992.

[9] CBT 400: Circuit breaker test system. Qualitrol Corporation. [Online]. Available: http://www.qualitrolcorp.com/docs/CBT 400 Brochure.pdf

[10] Optimizer+. Incon Inc. [Online]. Available: http://www.intelcon.com/-products/prs/pdf/op1.pdf

[11] TDR9000 Circuit Breaker Test System. Doble Engineering. [Online]. Available: http://www.doble.com/products/TDRSpecs.htm

[12] W.J.(Bill) Bergman, Equipment Monitoring Selection as a part of Substation Automation, IEEE Switchgear Meeting Pittsburgh, PA, Nov. 1999.

[13] C. Sweetser, W. J. (Bill) Bergman, G. Montillet, A. Mannarino, E. J. O'Donnell, R. William Long, J. Nelson, Gavazza, and R. Jackson; Strategies for Selecting Monitoring of Circuit Breaker, IEEE Transaction On Power Delivery VOL.17, NO. 3, July 2002

[14] Jeffrey Nelson, Electric utility Consideration for Circuit Breaker Monitoring, Procedings of the 2001 IEEE/PES T&D Conference and Exposition, Atlanta, GA, Nov. 2001.

[15] Martin H.B. de Grijp, Richard A Hopkins, Joost S. Bedet', John E Greyling, Condition Monitoring of High Voltage Circuit Breakers, AFRICON Sep.1996.

[16] John G. Proakis, Dimitris G. Manolakis, Digital Signal Processing - Principles, Algorithms and Applications, Prentice-Hall 3rd edition (2000)

[17] IEEE Standard Rating Structure For AC High-voltage Circuit Breakers Rated On A Symmetrical Current Basis, 28 Jul 1980.

[18] Walt Kester, Application Note from Analog Devices, MT-003: Understand SINAD, ENOB, SNR, THD, THD + N, and SFDR so You Don't Get Lost in the Noise Floor, REV. 0, Analog Devices 10-03-2005

[19] Recommendation ITU-R BS.561-2, Definitions of radiation in LF, MF and HF broadcasting bands
[20] IEEE Inc., 1999 "IEEE Standard Common Format for Transient Data Exchange (COMTRADE) for Power Systems", IEEE Std. C37.111-1999
[21] IEC 60255-24 Electrical Relays - Part 24: Common Format for Transient Data Exchange (COMTRADE) for Power Systems
[22] T. A. Welch, A technique for high-performance data compression IEEE Computer. Vol. 17, pp. 8-19. June 1984
[23] Karoly Molnar, Laszlo Sujbert, Gabor Peceli, "Synchronization of sampling in distributed signal processing systems," Intelligent Signal Processing, 2003 IEEE International Symposium, 4-6 Sept. 2003
[24] K. Martin, Precise Timing in Electric Power Systems, 47th IEEE International Frequency Control Symposium, Salt Lake City, UT, 1993.
[25] L. Essen, Frequency and Time Standards, Proceedings of the IRE, Volume 50, Issue 5, May 1962
[26] Phadke, M. Kezunović, B. Pickett, M. Adamiak, M. Begovic, G. Benmouyal, R. Burnett, Jr., T. Cease, J. Goossens, D. Hansen, L. Mankoff, P. McLaren, G. Michel, R. Murphy, J. Nordstrom, M. Sachdev, H. Smith, J. Thorp, M. Trotignon, T. Wang, M. Xavier, "Synchronized Sampling and Phasor Measurements for Relaying and Control," IEEE Transactions on Power Delivery, Vol. 9, No. 1, pp 442-452, January 1994.
[27] W.Lewandowski, C. Thomas, GPS time transfer, Proceedings of the IEEE Volume 79, Issue 7, July 1991
[28] W. Lewandowski, J. Azoubib, W.J. Klepczynski, "GPS: primary tool for time transfer," Proceedings of the IEEE, Jan 1999
[29] Telemetry Group Range Commanders Council, Inter-range instrumentation group time codes (IRIG) Standard 106-04, May 2004
[30] S. Hara and R.Prasad, "An Overview of Multi-Carrier CDMA", IEEE Comm. Magazine, Dec 1997
[31] EndRun Technologies, Præcis Ct Network Time Source, User's Manual, 2005
[32] Freewave technologies, Application Note #5406 - 1PPS Setup and operation, Sept, 1998.
[33] Mladen Kezunovic, Wireless Communications in Substations, Report project T-11, April, 2003
[34] Sinem Coleri Ergen, ZigBee/IEEE 802.15.4 Summary, Berkeley, CA, Sept, 2004
[35] Final Report of IEEE Power System Relaying Committee Working Group H8, 2001, "File Naming Convention for Time Sequence Data", Fault Disturbance Analysis Conference, Atlanta, Georgia; and the Spring 2001 Meeting of the IEEE Power System Relay Committee

# Final Report for FY 2003

# “Data Acquisition Unit”
# Requirements and Specifications

# CERTS Project
# Final Report for FY 03

Mladen Kezunovic
Predrag Teodorovic

Texas A&M University August 18, 2004

# Table of Contents

Acknowledgement

Executive Summary ..... 1

1. Background ..... 2
    1.1 Circuit breaker ..... 2
    1.2 Electrical characteristics of circuit breaker ..... 4
    1.3 Tripping and Closing sequences ..... 6

2. Requirements ..... 8

3. Design specification ..... 12
    3.1 Modularity of DAU ..... 12
    3.2 SCI module ..... 13
    3.3 DA module ..... 13
    3.4 WT module ..... 14

4. Testing
    4.1 Lab testing ..... 15
        4.1.1 Modules testing ..... 15
        4.1.2 DAU testing ..... 19
    4.2 Field testing ..... 24

5. System assembling and mounting ..... 25
    5.1 System components and housing ..... 25
    5.2 Wiring and assembling ..... 27
    5.3 DAU outlook ..... 29

## Acknowledgement

The work described in this report was coordinated by the Consortium for Electric Reliability Technology Solutions, and funded by the Office of Electric Transmission and Distribution, Transmission Reliability Program of the U.S. Department of Energy under Interagency Agreement No.DE-AI-99EE35075 with the National Science Foundation.

## Executive Summary

The traditional approach, in existence today, assumes that local substation functions are organized according to the specific needs: protection of individual apparatus, monitoring for SCADA applications, remote switching, operator measurements, maintenance of substation apparatus, etc. Installing a Substation Automation (SA) system, consisting of multiple Intelligent Electronic Devices (IEDs), provides a novel data processing infrastructure allowing implementation of new applications. This project addresses several new applications based on integrating the IED data, processing it at the substation level, and sharing the results among the different users. The project was approved with an objective to "Improve utilization of substation data, coming from variety of Intelligent Electronic Devices (IEDs), for local and system-wide applications".

In the first phase of the project (FY03), the main focus was on major improvements in the area of circuit breaker monitoring. SCADA systems, while otherwise quite reliable source of information, do not have a very detailed view of the circuit breaker status except for the position of breaker status contacts "a" and "b". These contacts are notoriously unreliable, in particular on some types of breakers. In addition, various other utility groups, such as maintenance and performance assessment, are very much interested in knowing more about the circuit breaker status but this information is not readily available in real time and has to be obtained through field tests that can only be performed occasionally (annually). The importance of the lack of reliable monitoring of circuit breakers may be illustrated with the recent blackout in the Northeast in August of 2004 where the inability to tell if a transmission line was in service, which can be determined through breaker position, was a major contributor to the unfolding cascading event leading to the overall blackout.

To address this issue, a goal was to develop a new IED for on-line monitoring of circuit breaker control signals. This enhancement in monitoring circuit breakers provides much more reliable information about the circuit breaker status. This development is quite new and assumes that each breaker of interest will be equipped with a low-cost wireless data acquisition unit capable of recording the control signals each time the breaker operates.

This report describes how this data acquisition unit (DAU) may be designed and interfaced to the substation concentrator for data collection and processing. The first part of the report briefly describes how the control signals are connected and what information they convey. Based on this, the requirements specification for the DAU is outlined and the design is described. The test results and description of field installation are described next. This new IED can now be used to enhance the SA system.

The next phase of the project (FY05) will be focused on demonstrating the benefits of such an application by installing the DAU in a substation and interfacing the signals to expert system software for automated analysis of the results developed earlier. Once this is demonstrated, the final stage of the project will show how the improved circuit breaker monitoring system may be interfaced to the new phasor measurement system to allow an overall ability to monitor and control power systems much more reliably in the future.

# 1. BACKGROUND

## 1.1 Circuit Breaker

Circuit breakers are electro-mechanical devices that should, working together with protective relays, provide distribution of electrical energy but also prevent damages to certain parts of the network during fault conditions. Mechanical structure of the circuit breaker is shown in Figure 1-1.

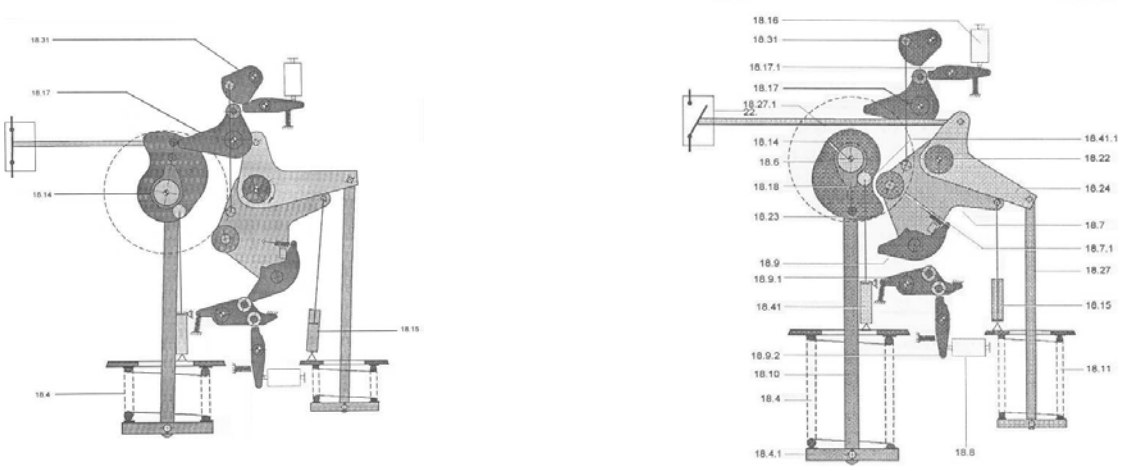


**a) Closed state** **b) Open state**

Figure 1-1: Mechanical structure of the Circuit breaker

During normal operating mode, circuit breaker can be found in two different states: Open or Closed state. Circuit breaker is in a closed state when there is no fault present on the transmission line, while open state occurs when fault is present somewhere on the line or if there is a maintenance outage.

Figure 1-2 shows a circuit breaker during repair. Figure 1-3 shows inner side of the breaker. Connector, which is important for our “Data Acquisition Unit”, is marked and can be spotted.

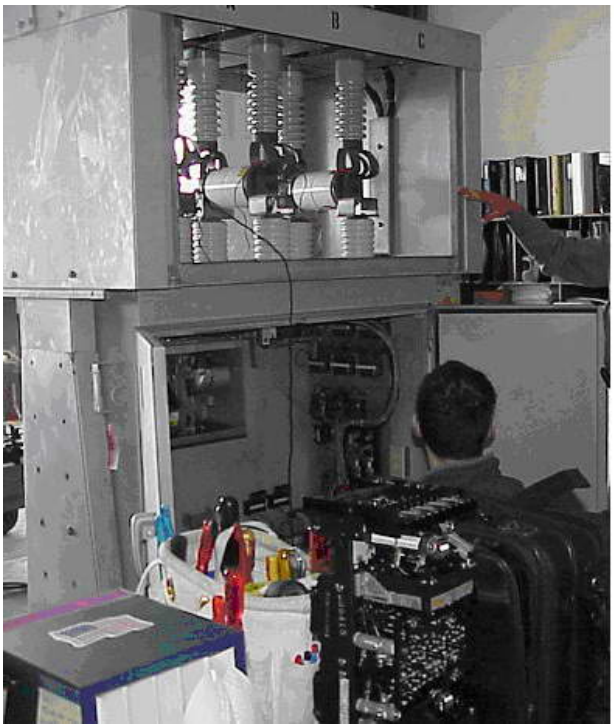

Figure 1-2: Circuit breaker

Figure 1-3: Inner side of the circuit breaker

Connector marked in Figure 1-3 provides control signals generated either at protective relay, or at circuit breaker itself. There is going to be much more talk about these signals in the next paragraph, but for now only location of the connector is mentioned. Location itself is going to be very important for design of the "Data Acquisition Unit", since connector resides inside of the metal box, where electromagnetic noise is very high. This

fact has to be considered during system design if we want the breaker to work properly even in such severe electromagnetic conditions.

There are also several types of breakers (transmission breaker, distribution breaker), depending on current and voltage level they are supposed to interrupt.

### 1.2 Electrical characteristics of a circuit breaker

There are 15 electrical signals generated during either tripping or closing of the breaker. 11 of them are analog, while other 4 are status signals. The most important signals are Trip Event and Close Event. These signals, generated by the protection relay, initiate some other signals (some generated during tripping, some during closing only), and as a result tripping or closing of the circuit breaker occurs. Figure 1-4 shows simplified control circuit of the circuit breaker.

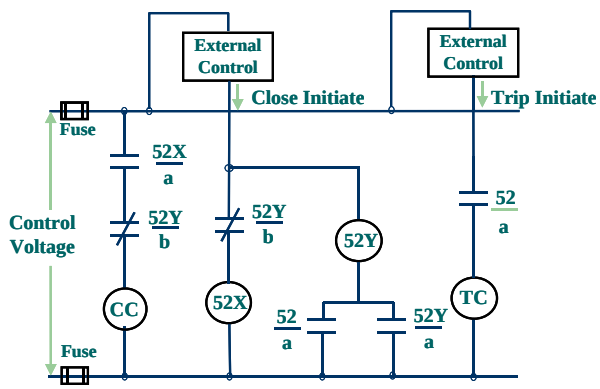


Figure 1-4: Control circuit of the circuit breaker

Signals, not mentioned in the Figure 1-4, which change their values as a result of tripping or closing are:

1. Control DC – analog signal
2. Light wire – analog signal
3. Yard DC – analog signal
4. A contact – analog signal
5. B contact – analog signal
6. Close coil current – analog signal
7. Trip coil current #1 – analog signal
8. Trip coil current #2 – analog signal
9. Phase A current – analog signal
10. Phase B current – analog signal
11. Phase C current – analog signal
12. Close event – status signal
13. Trip event – status signal
14. X coil – status signal
15. Y coil – status signal

Figure 1-5 shows waveforms of signals, which change their values during tripping and closing, respectively. Some of the signals change their values during both tripping and closing (A contact, B contact), while some of them change as a result of either tripping or closing (Trip current, Close current).

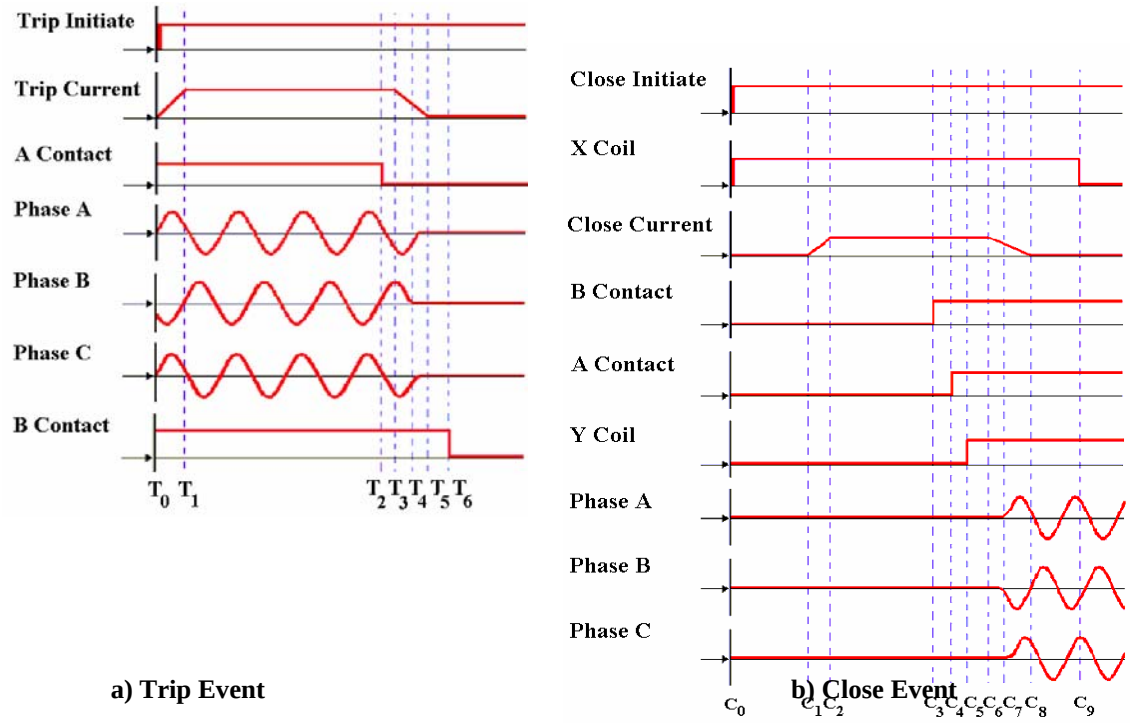


Figure 1-5: Waveforms of circuit breaker signals

As it can be seen from the figure above, tripping results in sinusoidal signals on phases A,B and C disappearing. On the opposite, as a result of closing, phases are switched on again (sinusoidal waveform are present).

Waveforms of signals mentioned above are important because after analyzing them, it can be determined whether breaker works properly or not.

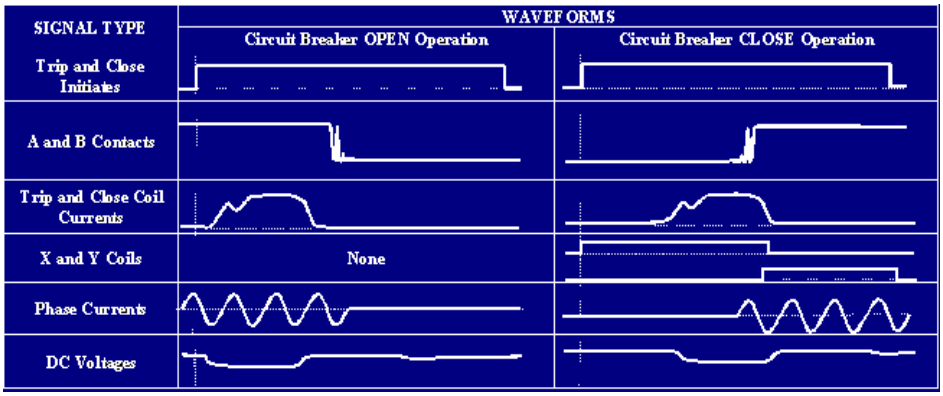


Figure 1-6: Performance characteristics of circuit breaker

All of the signals mentioned above are voltage signals, even though some of them represent currents (Trip current, Close current). Voltage signals, which represent currents, are taken from shunts. Figure 1-7 shows voltage levels of both voltage signals and current signals after measuring voltage drop across a shunt.

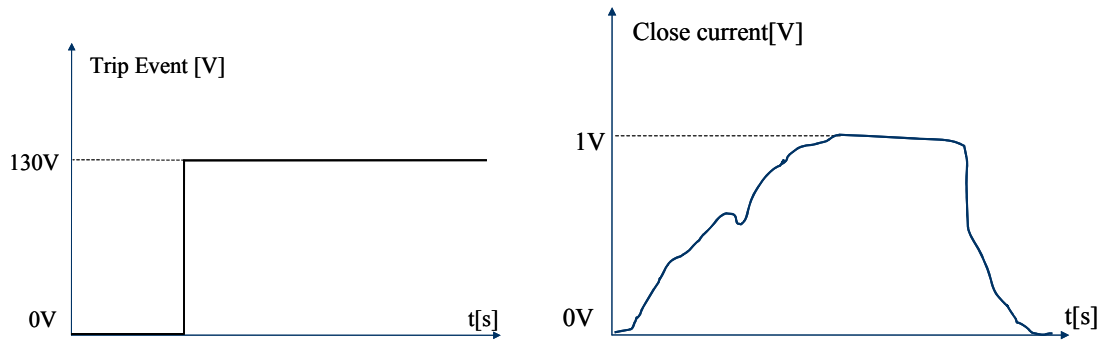


Figure 1-7: Voltage levels of circuit breaker signals

Observing the shape of the signals will be very important when we reach the design specifications.

### 1.3 Tripping and Closing sequences

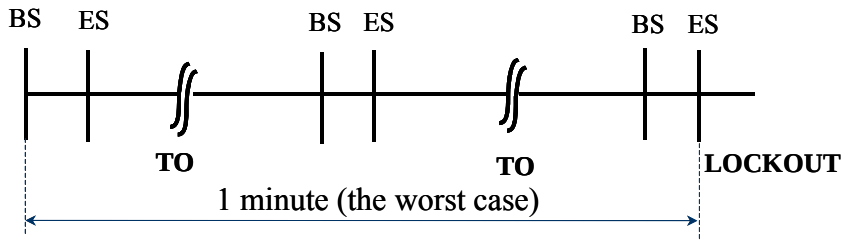


- BS -- beginning of sequence
- ES – end of sequence
- TO – time out

Figure 1-8: Tripping and closing sequences

Figure 1-8 shows sequences occurring as a result of fault present somewhere on a transmission line. What actually happens is that sequences are initiated in order to determine whether fault, which occurred, is still present or not after multiple reclosing takes place. First sequence usually consists of trip event (fault is there), close event (to see if the fault is gone) and trip event once more (if fault is still present). After that sequence there is time a out which lasts from 13 to 25 seconds and its purpose is to wait for fault to end in a certain period of time (depending on the type of breaker). After the time out, closing of the breaker is performed. If fault still persists another tripping is

initiated. Once more, time out and sequences of closing and tripping are repeated and if fault is still there, lockout is taking place. That means that there will be no more attempts to close the breaker, since fault is, obviously, not temporary.

The length of sequences and time outs depends on the type of the breaker. Worst case (considering recording of the signal which will be our main task) is permanent fault on a distribution breaker, when 1 minute elapses before a lock-out.

During the sequences, all of the 15 signals change their states. Some of them change state as a result of Trip Event signal change, some of them as a result of Close Event signal change. Length of sequences is very short (the whole sequence last around 0.5 seconds), so that fact should also be considered while designing the system.

## 2. REQUIREMENTS

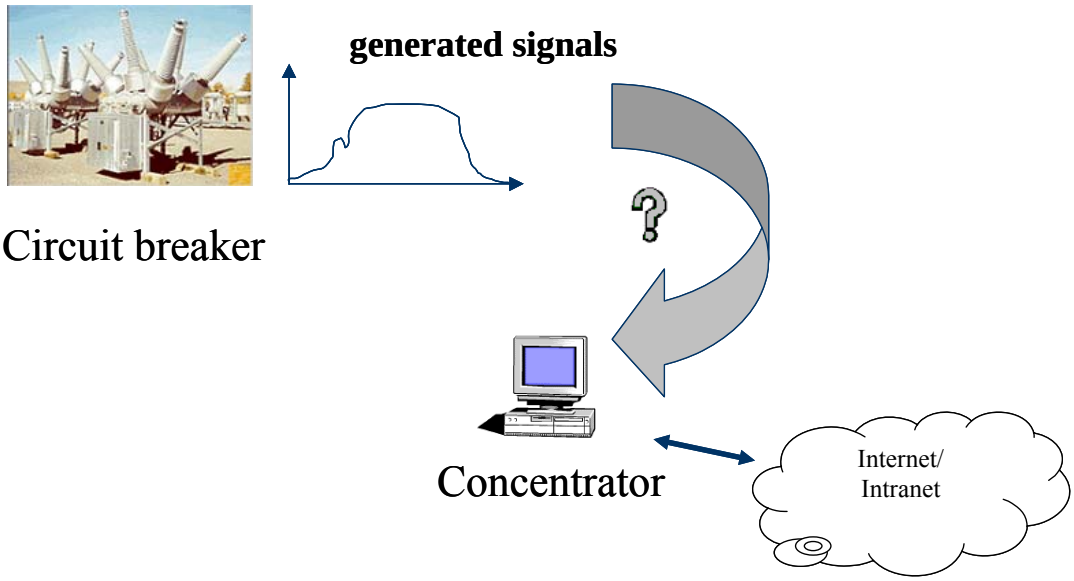


Figure 2-1: Main task of the "Data Acquisition Unit"

Figure 2-1 above shows the main task of our data acquisition unit. There are signals generated during sequences of tripping and closing (shown in Table 2-1), which should be recorded, and wirelessly transferred to a concentrator PC, from where data can be easily transferred further over the Internet (or LAN). The Concentrator PC is usually located in a control house at the substation.

So, there are three main subtasks included in the main task:

- **Perform data acquisition of 15 signals (11 analog and 4 status) and record sequences of tripping and closing;**

- **After capturing sequences, create files according to a COMTRADE file specifications;**

- **Wirelessly send files to concentrator PC.**

Table 2-1: Circuit breaker signals with descriptions [1]

| Signal Name | Channel | Type | Analog or Status | Nominal Range | How it relates to the circuit (Fig 1-4) |
|---|---|---|---|---|---|
| Control Voltage | Voltage | Contact | A | 125V ± 15V | Provides Pos/Neg voltage for contacts |
| Light Wire | Voltage | Contact | A | 125V ± 15V | ON/OFF Indicator |
| Aux. Contact B | Voltage | Contact | A | 125V ± 15V | Establishes connection from Light to Neg |
| Yard DC | Voltage | Contact | A | 125V ± 15V | Runs CB motor |
| Aux. Contact A | Voltage | Contact | A | 125V ± 15V | Indicates breaker status |
| Close Coil Current | Current | Shunt | A | <10A | Used to physically close the CB |
| Trip 1 Coil Current | Current | Shunt | A | <10A | Used to physically open the CB |
| Trip 2 Coil Current | Current | Shunt | A | <10A | Used to physically open the CB |
| Phase A Current | Current | Shunt | A | ~5A | Indicates breaker status |
| Phase B Current | Current | Shunt | A | ~5A | Indicates breaker status |
| Phase C Current | Current | Shunt | A | ~5A | Indicates breaker status |
| Close Initiate | Event | Contact | S | 125V ± 15V | Initiates a close operation |
| Trip Initiate | Event | Contact | S | 125V ± 15V | Initiates a trip operation |
| 'X' Coil | Event | Coil | S | 125V ± 15V | • Closes all 52X contacts<br>•Establishes a path from POS to 52CC |
| 'Y' Coil | Event | Coil | S | 125V ± 15V | •Opens all 52Y contacts<br>•Interrupts 52CC and X coil currents |

[1] Note: More details about theory of circuit breaker operation can be found in document "Automated Circuit Breaker Analysis", A Thesis by Christopher Donald Nail

Our unit should reside near the circuit breaker, and monitor 15 signals, especially the Trip Event signal which indicates that fault is present somewhere on the transmission line and initiates beginning of the tripping and closing sequences. When trigger occurs (Trip Event signal goes from low to high voltage level) the subsequent sequences have to be recorded before a lockout occurs. Recorded events have to be stored in COMTRADE files (files which comply with COMTRADE standard specification), and in that format transferred to a concentrator PC.

Sampling rate has been selected to be 5760 Hz because application for analyzing recorded data was designed for that sampling rate. Other sampling rates may be selected as well.

***NOTE: Since application for analyzing recorded data needs exact waveforms of all signals (analog and status signals), all 15 signals are recorded as analog signals, even though four of them are status signals!***

Figure 2-2 shows one particular waveform of the status signal and the way it is written in COMTRADE file.

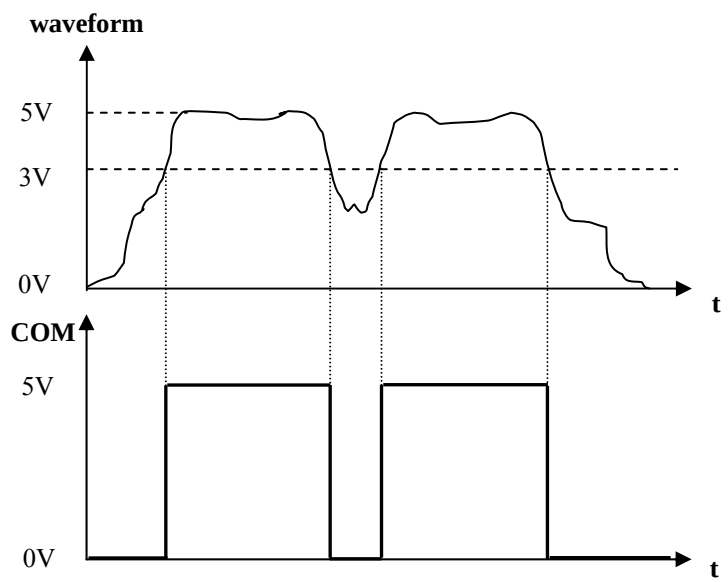


Figure 2-2: Waveform and corresponding COMTRADE record of status signal

Distance between concentrator PC and any circuit breaker in the field, doesn't exceed 200m. That is also very important issue which has to be considered during design of DAU. Requirements are summarized in Table 2-2.

| Task Number | Task Description |
|---|---|
| 1 | Monitor 15 signals generated at circuit breaker |
| 2 | When status on 'Trip Event' Signal changes, start recording sequences before lock out |
| 3 | Sampled data store in 3 files according to COMTRADE file specification[2] |
| 4 | Transfer recorded files to concentrator PC from where they could be distributed further to applications responsible for data analysis |

Table 2-2: DAU Requirements

[2] *IEEE Std C37.111-1999* (Revision of IEEE Std C37.111-1991)
***IEEE Standard Common Format***
***for Transient Data Exchange (COMTRADE) for Power Systems***

# 3. DESIGN SPECIFICATIONS

## 3.1 Modularity of DAU

To a flexible design of DAU, we have used a modular approach. Modular approach allows us to create separate modules of DAU. Each of them should be completely independent from the others, while integration of all modules solves the problem of recording sequences and transferring them to another applications.

Considering nature of the signals (their voltage levels) and requirements, there are three separate modules of DAU:

- **Module for signal conditioning and galvanic isolation (SCI module);**
- **Module for data acquisition and COMTRADE files creation (DA module);**
- **Module for wireless transfer of recorded data (WT module).**

Modules are shown in the Figure 3-1.

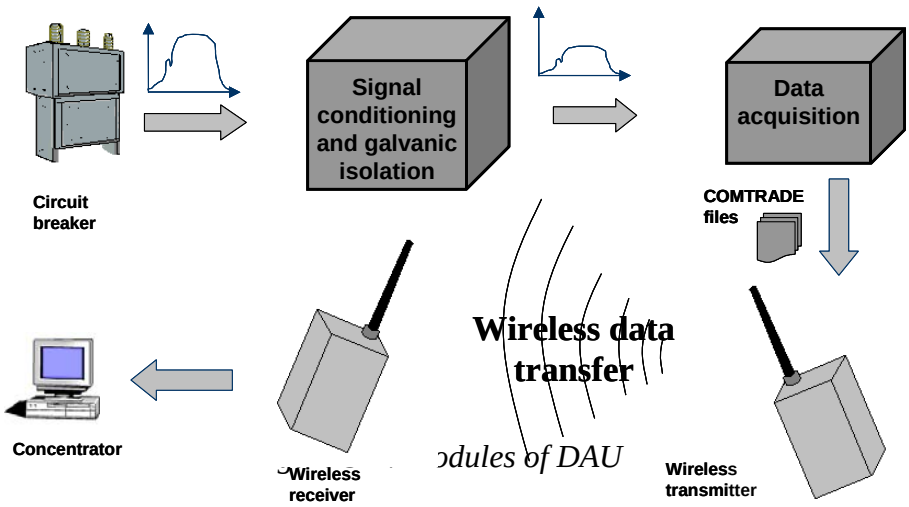


*odules of DAU*

### 3.2 SCI module

SCI module has to provide appropriate voltage levels for data acquisition. As we mentioned in paragraph 1.2 (Electrical characteristics of a circuit breaker), voltage levels of signals at circuit breaker are either 130VDC or 1 VDC. Since voltage range of the signals at the input of the DA module has to be (-5,+5)V, SCI module should provide that. Obviously, SCI module should have adjustable gain for all 15 channels, so user can determine which gain to use with which signal at the input of the module. For example, if signal at the channel 6 is "Trip current" signal, user should adjust gain 5 to that channel, in order to provide 5V voltage level at the output of SCI module (because current signals from CT's have amplitude of 1V and DA module requires 5V at the input).

Beside that, another purpose of SCI module is to provide galvanic isolation of the signals at the input. With isolation provided, faults at the input of SCI module won't damage components at the output (DA module). Functionality of SCI module is shown in Figure 3-2.

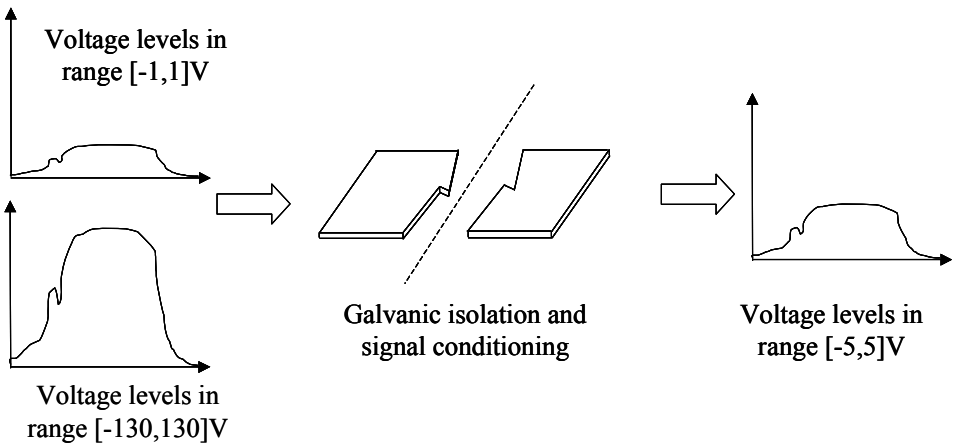


Figure 3-2:Functionality of SCI module

### 3.3 DA module

DA module consists of a processor board and a board for data acquisition. While the board for data acquisition has to provide desired sampling rate (5760 Hz), the processor board should provide efficient system resources management and also management of the data acquisition board itself. Figure 3-3 shows functionality of DA module. DA module has to provide sampling, monitoring and, when the fault is present, recording of signals from all 15 channels. Although Figure 3-3 shows only one signal, all 15 signals have to be included in COMTRADE files.

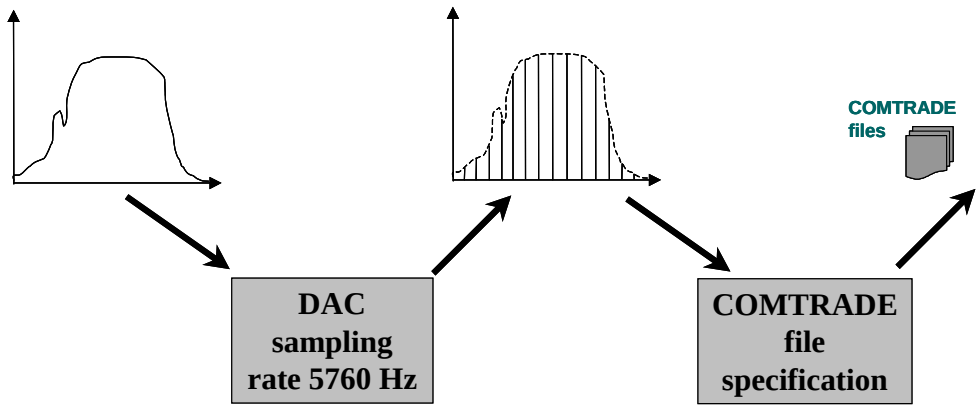


Figure 3-3: Functionality of DA module

### 3.4 WT module

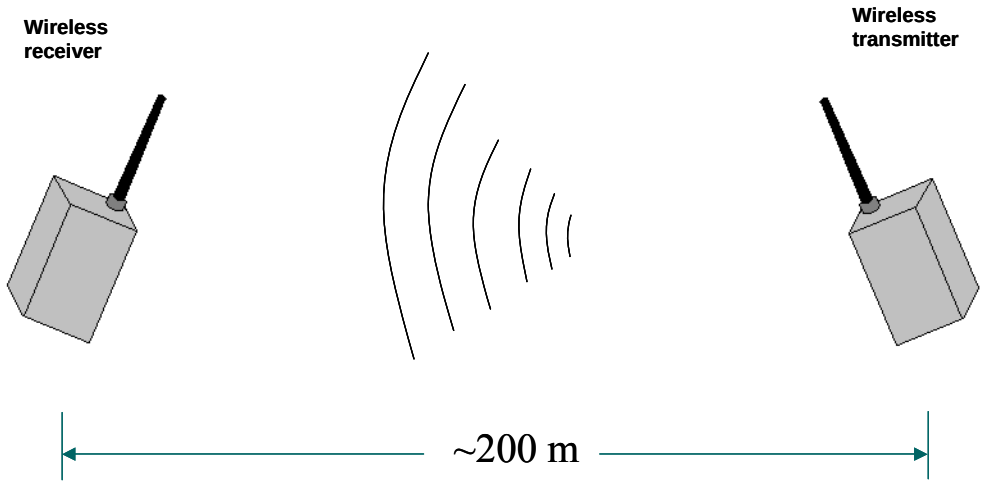


Figure 3-4: Functionality of WT module

Figure 3-4 above shows functionality of WT module. Every wireless system capable of transmitting data over 200m would be appropriate for DAU. Transfer protocol for data transfer has to be established, providing that concentrator PC receives valid COMTRADE files from DAU.

# 4. TESTING

## 4.1 Lab testing

### 4.1.1 SCI module testing

The Board can operate in two different modes: amplifying with a gain bigger than 1 ($A_v > 1$) and amplifying with a gain lower than 1 ($A_v < 1$). Two modes are distinguished by jumpers. Mode with $A_v > 1$ is used when the input signal comes from current transformer and thus it is of lower amplitude than needed for data acquisition (amplitude is 1V). On the opposite, when the applied signal is a voltage signal of higher amplitude (130 VDC), the gain has to be smaller than 1 in order to provide the voltage level of 5V necessary for data acquisition. If input signals represent current signals, jumpers should be disconnected, and connected if input signals represent voltage signals.

For simulating current signals, signal generator was used. It can generate signals of amplitude up to 15 V, which was more than enough. For simulating voltage signals from a circuit breaker, AVO test-set has been used. Signal waveforms have been made using "ATP draw" software and reproduced using AVO test-set.

Prior to testing some minor changes have been made on the board. When the board has been designed, the same power supply has been used for both sides of the circuit (high voltage and lower voltage side). Since we need complete galvanic isolation, two completely separate power supplies should be used, and thus all integrated circuits should use appropriate power supply. That is why power lines onboard were cut and new power lines are made. Results of the testing are shown in Figures 4-1 and 4-2.

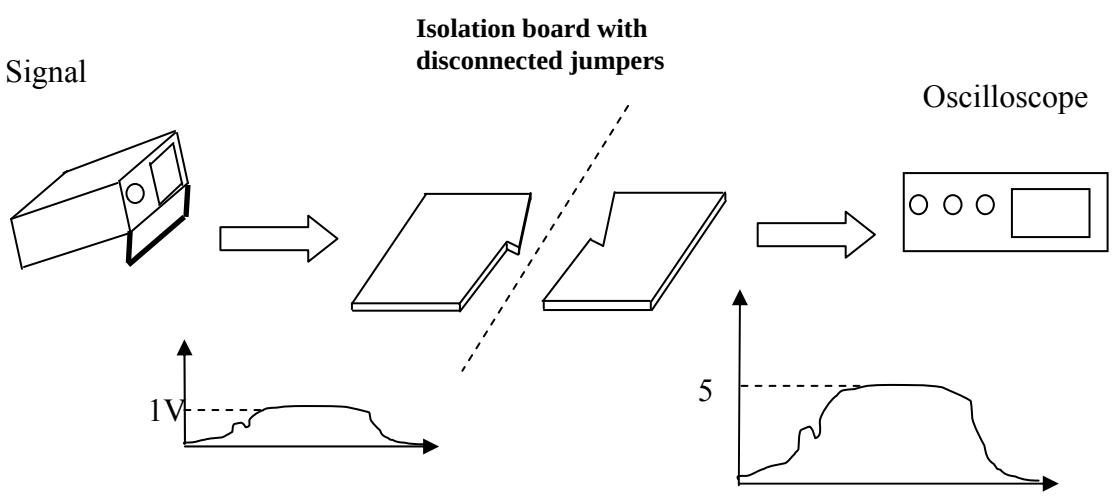


Figure 4-1: Signal amplifying with disconnected jumpers

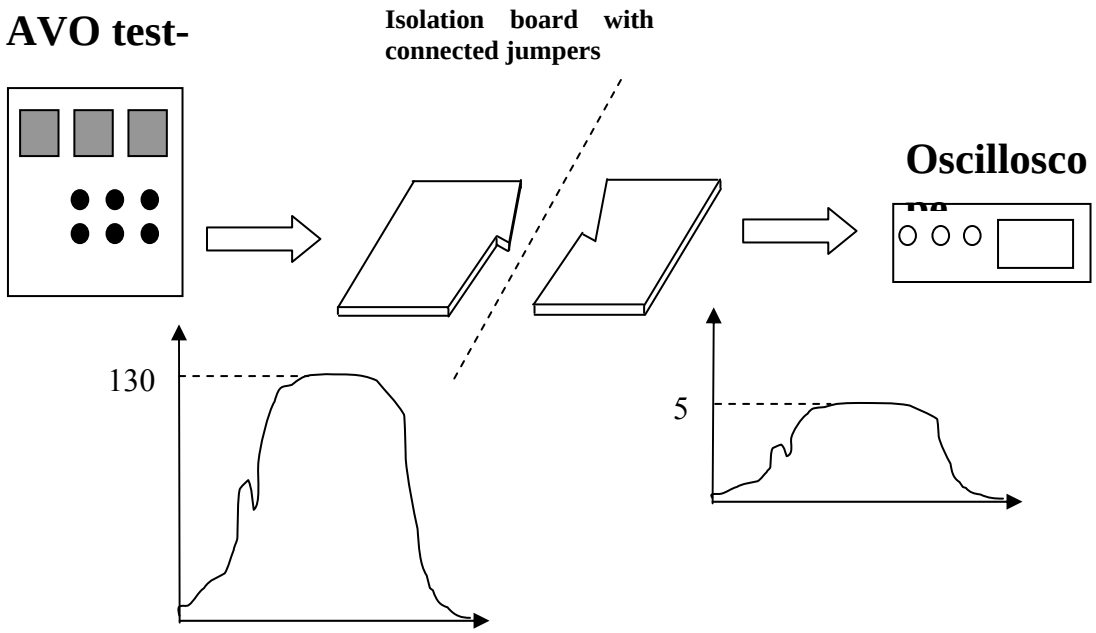


Figure 4-2. Signal amplifying with connected jumpers

As it can be seen from figures 4-1 and 4-2, signals at the input and output of the board matched each other in waveforms. They only differed in the amplitude. With disconnected jumpers, the amplitude of the signal at the output was 5 times higher than the signal amplitude at the input. With connected jumpers, signal amplitude at the output was 26 times lower than at the input. Besides, the signal conditioning and galvanic isolation have been performed using Burr-Brown's isolation amplifier.

The behavior of the board with different frequencies of input signal has been determined. Results have shown that isolation board behaves like a low-pass filter with cut-off frequency of 1.8 kHz (Figure 4-3). Because of that, the needed sampling rate of 5760 Hz may be implemented. Negative slope of the transfer function at frequencies above 1.8 kHz is –40dB/decade, meaning that signals at frequency of 2 kHz are repressed almost totally.

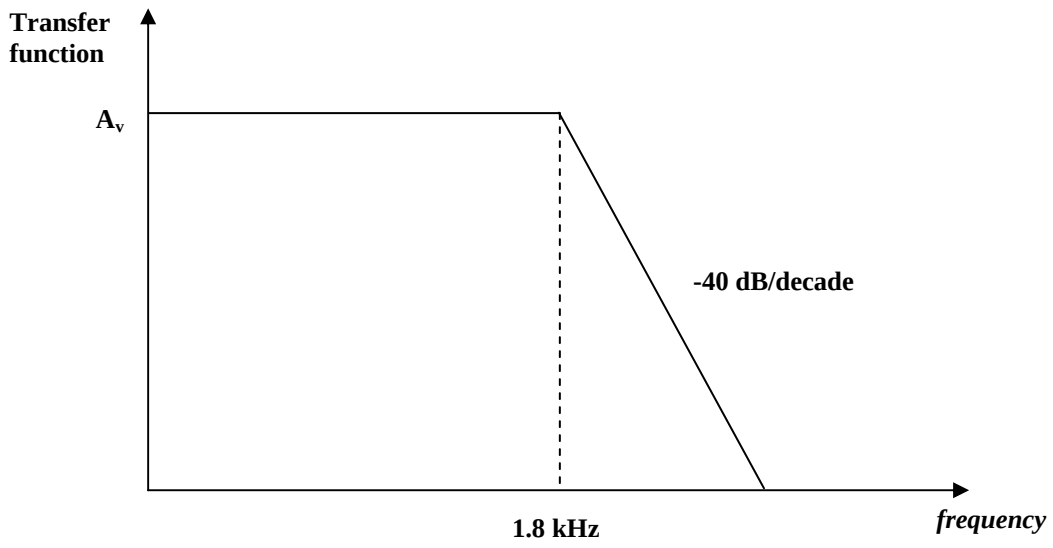


Figure 4-3: Frequency domain analysis of the isolation board

### DA module testing

Main tasks of the DA module are to perform data acquisition of output signals from SCI module and then create COMTRADE files according to sampled signals. There are 15 signals to be sampled, sampling rate should be 5760 Hz and the length of recorded signals should be 1 minute. Input signals for application (output signals from SCI module) have to be within [-5,+5] V range. Assumed that isolation board is adjusted well, this is going to be provided.

Since this application was tested separately from other modules, input signal with voltage level of 5V has been generated using signal generator.

The application works as follows: it first waits for signal called Close Event (at channel number 12) to become active. That means that after connecting the whole system with the circuit breaker (which was previously de-energized) power supply is applied again. After reenergizing of the system application goes into a normal mode of operation waiting for Trip Event signal (at channel number 11) to become active (meaning that falt is present). After that, samples from all 15 channels are being recorded during 1-minute time interval. At the end, three files should be made according to COMTRADE file specification (header, configuration and data file).

For testing purposes, pulses have been generated using signal generator. First, pulse has been applied to channel number 12 (simulating Close Event which will bring application

into normal mode of operation). After that, pulse has been applied to channel number 11 (simulating Trip Event which will initiate COMTRADE file recording).

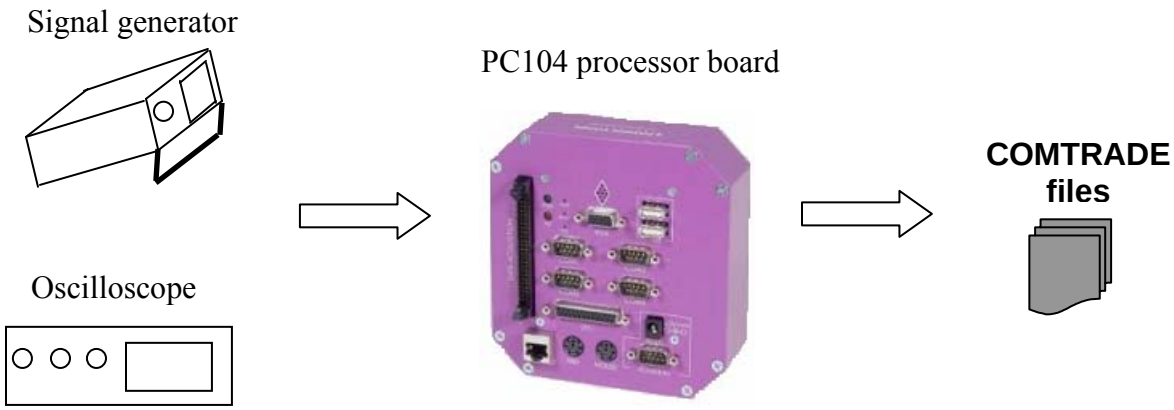


Figure 4-4: Testing the application using signal generator

Waveforms of generated signals were observed by oscilloscope and they completely matched recorded data from COMTRADE file. The time information about tripping and the first sample stored in data COMTRADE file, which should be included in configuration file, also matched the time moments when mentioned events had happened.

**WT module testing**

File transfer over a distance of 200m couldn't be performed in the lab, so only a file transfer between DAU and computer (around 10 meters far apart) was performed. Files were sent and received after approximately 25 minutes. Transfer lasted that long because data file was relatively big (around 13MB).

### 4.1.2 DAU testing

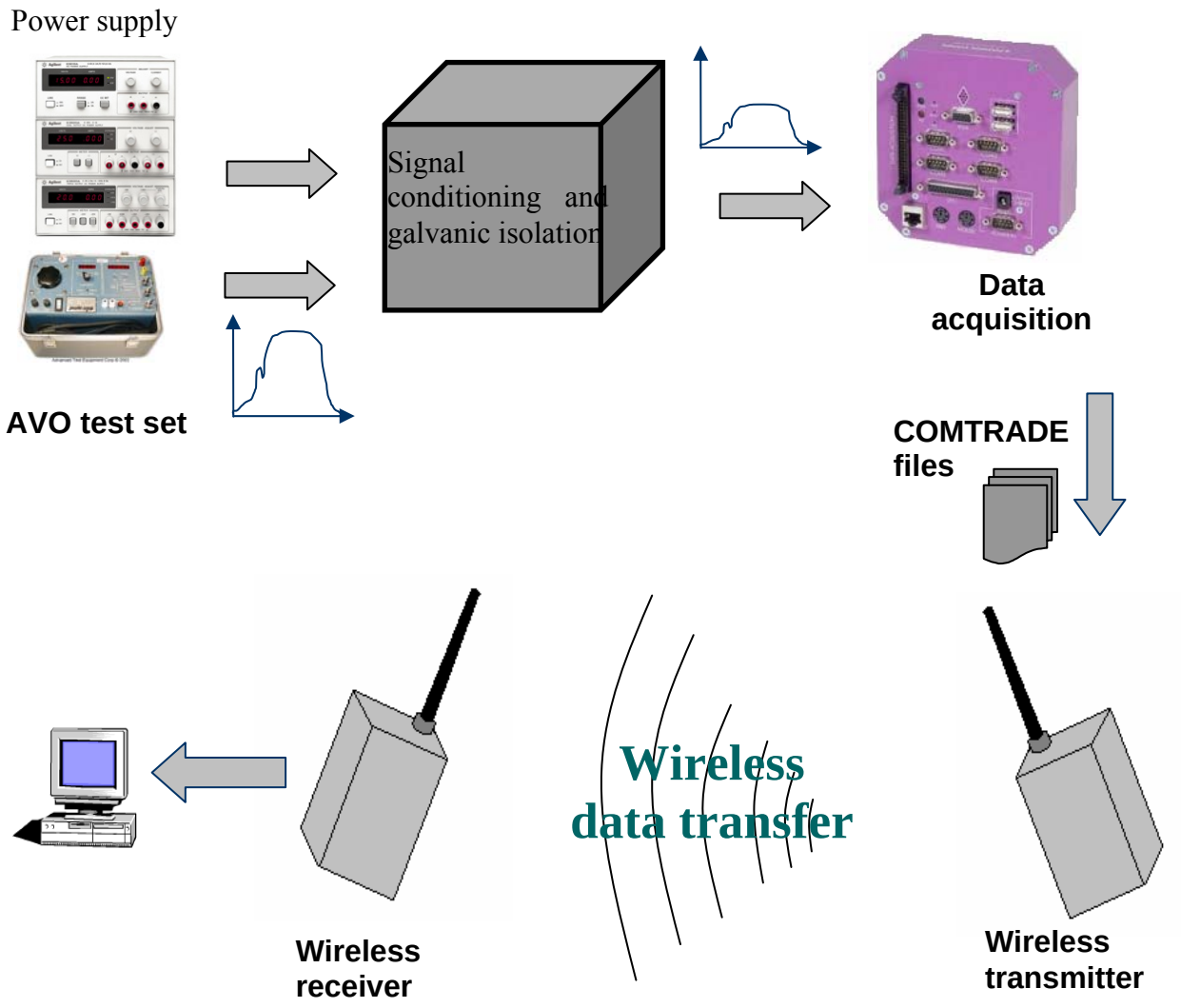


Figure 4-5: Components used for testing

Testing was performed using devices from the figure 4-5 above. AVO test-set is used to simulate signals from the circuit breaker (high voltage signals with voltage levels of 130VDC). Two power supplies had to be provided. First was for components in front of the integrated circuit for galvanic isolation, and second for components at the low voltage level side (after galvanic isolation). That is necessary if we want a complete galvanic isolation (with completely isolated circuits on both sides of the ISO122P isolation chip).

The Board for signal conditioning and galvanic isolation, with given power supplies, provides signals within desired voltage range needed for data acquisition. After conditioning and isolation, data acquisition is performed, and recorded data file is sent (together with the header and configuration file) to the concentrator PC. Application running at the concentrator PC receives the three files (for single event recorded) and saves them on a local hard drive. After receiving the files, concentrator polls next DAU, but since we had only one DAU available, instead of polling another DAU, the same DAU was asked for new files recorded.

The most important part of testing was to simulate signals from the circuit breaker. Problem was to generate signal of 130 VDC, which would be conditioned and sampled afterwards. For that purpose, AVO test-set has been used. It provides output of up to 200VDC with enough current capacity according to the input impedance of the board for signal conditioning and galvanic isolation. Signals generated with AVO test-set had waveforms shown in Figure 4-6.

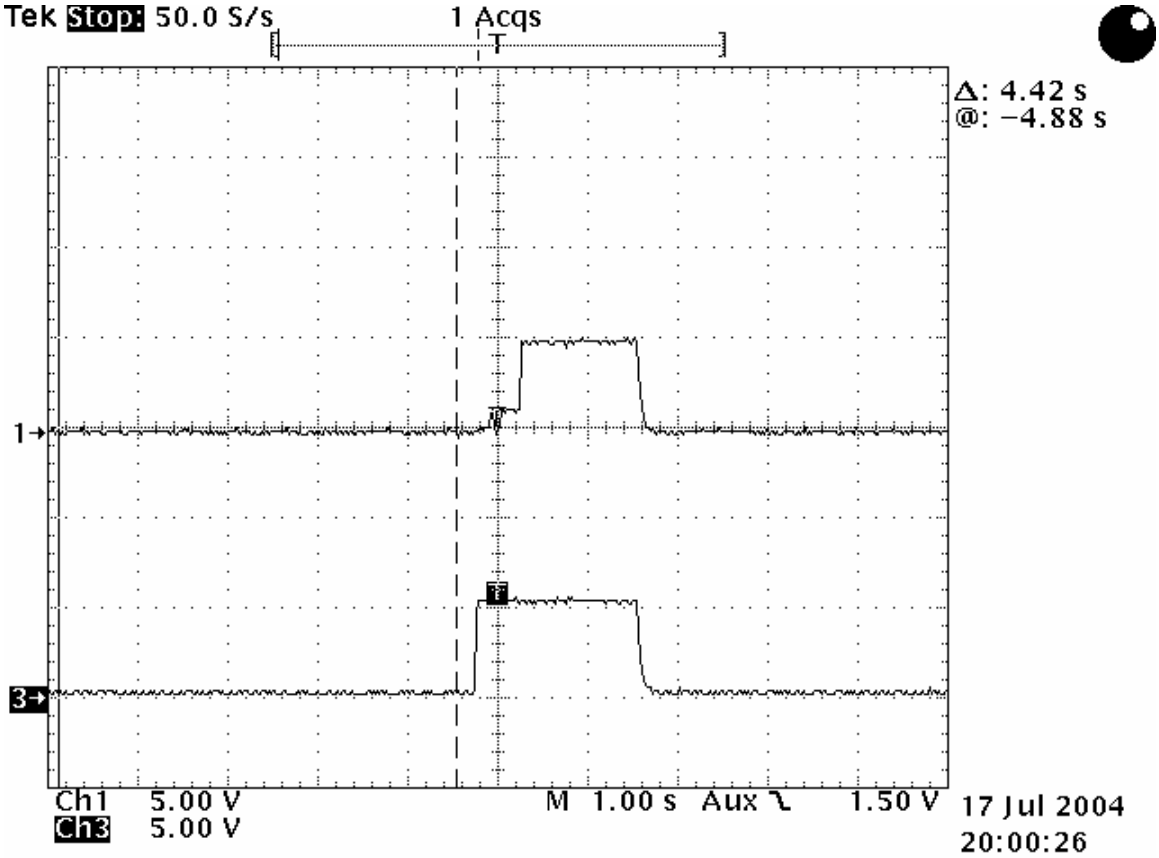


Figure 4-6: Waveforms of “Trip Event” and “Close Event” signals recorded by oscilloscope

Signal at channel 3 is “Close Event”, and the other one is “Trip Event”. Signals are recorded at the output of the board for signal conditioning and galvanic isolation. That can be noticed if voltage levels of the signals are observed. Even though the signals of 130VDC are brought to the input of the board, signal levels at the output are inside the (-5,+5)V range. Signals recorded are also isolated from the high voltage level signals at the input.

Signal at channel 3 (of the oscilloscope) is used as “Close Event” signal, because it made transition from 0 to 5V (from 0 to 130V) before the signal at channel 1. After performing AD conversion, recording COMTRADE files, and performing wireless data transfer of the files, “Relay assistant” software was used to reproduce waveforms of the signals recorded by DAU.

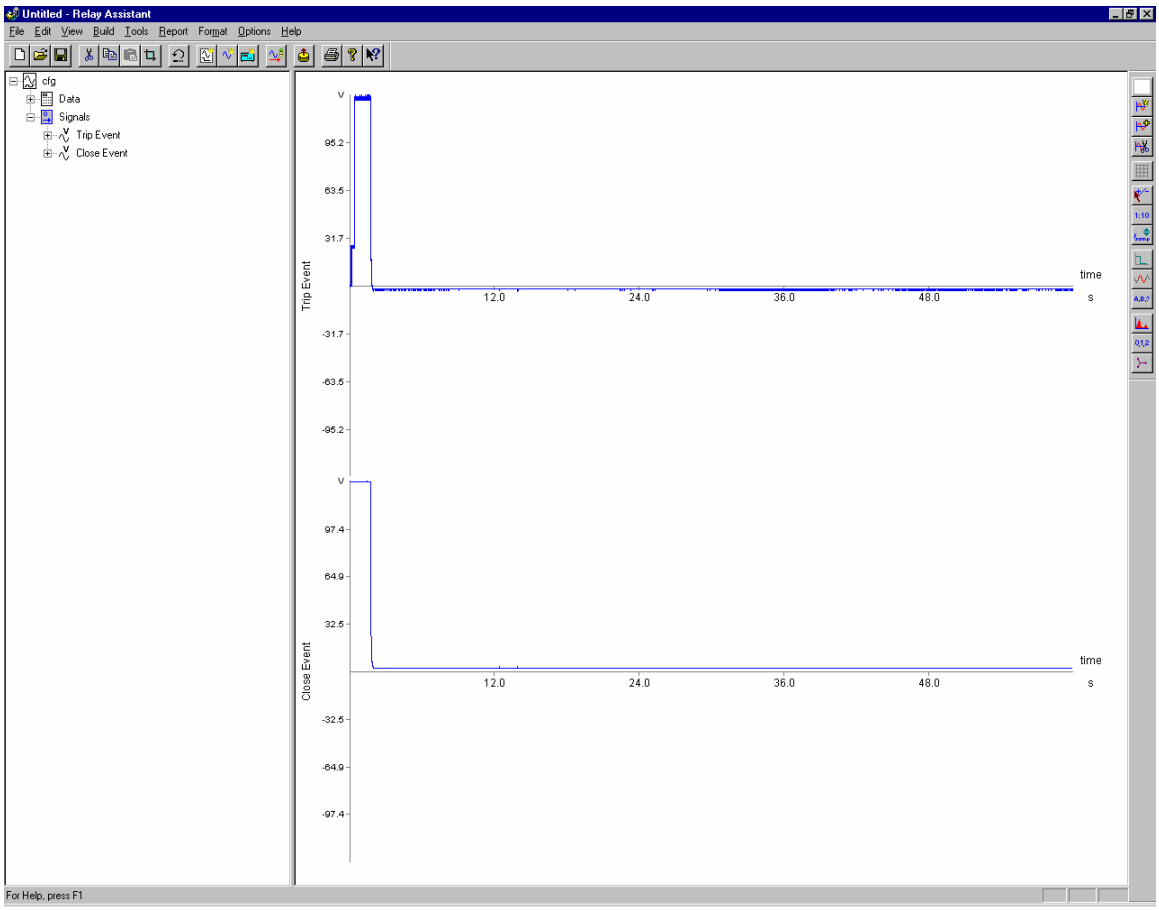


Figure 4-7: Waveforms of “Trip Event” and “Close Event” signals recorded by Data Acquisition Unit

Signals recorded by DAU were lasting 1 min. In Figures 4-8 and 4-9 only 4 seconds of both channels are shown.

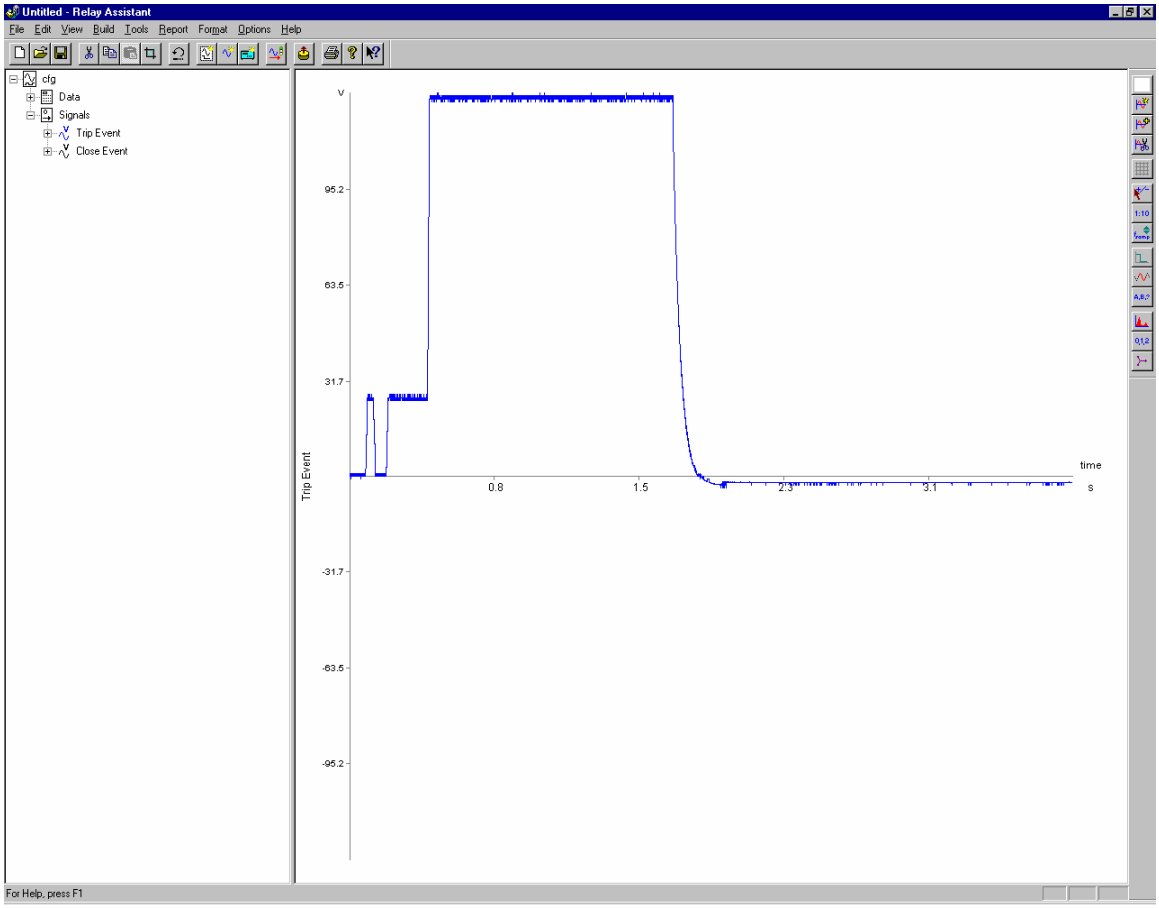


Figure 4-8: Waveform of "Trip Event" signal recorded by Data Acquisition Unit

As it can be seen, the waveform matches the "Trip Event" signal captured by the oscilloscope. There is approximately 0.5 seconds of "Trip Event" signal waveform recorded before the tripping takes place. Since the signal is reproduced according to the configuration and data files, voltage level is 130V, even though voltage level of the recorded signal was 5V. That is because the gain of 26 is written in the configuration file (during signal conditioning the signal level was lowered from 130 to 5V)

In Figure 4-9, the "Close Event" signal is shown. Obviously, voltage level of the signal was 5V (130V at circuit breaker) when the tripping occured. Transition from 0 to 5V wasn't recorded because only 0.5 seconds before tripping were recorded and transition happened around 0.2 seconds before that.

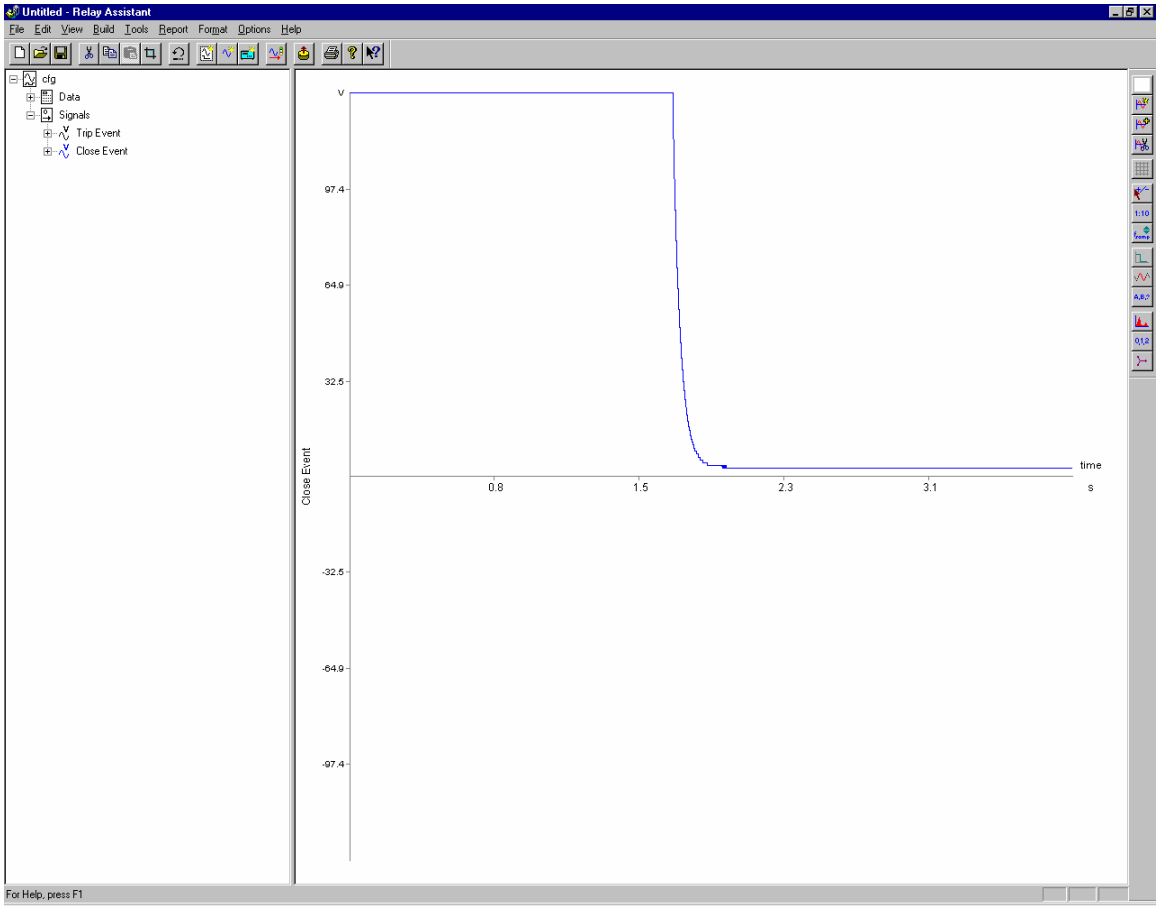


Figure 4-9: Waveform of "Close Event" signal recorded by Data Acquisition Unit

What can also be noticed is that voltage level of "Close Event" signal is stuck at 5V. If we pay a little bit more attention to Figure 4-6 (channel 3) we can realize that voltage level of signal is around 5.3V. Since the input signal voltage range of the acquisition board is adjusted at (-5,+5)V, any signal with the level higher than 5V is sampled as 5V level signal.

This problem can be solved with finer adjustment of the board for signal conditioning. There is a potentiometer onboard, which should assure that the output signal level is within 5V. That fact was neglected prior to the testing and that is the reason why the signal with voltage level higher than 5V appeared. So, with proper adjustment of the hardware, system works correctly, which is obvious as the waveform of "Trip Event" signal is observed.

## 4.2 Field testing

This activity will be completed in the next phase of the project.

# 5. SYSTEM ASSEMBLING AND MOUNTING

### System components and housing

Two metal boxes, received from Center Point Energy, are supposed to be a housing for all the system modules. Boxes have shape like in Figure 5-1:

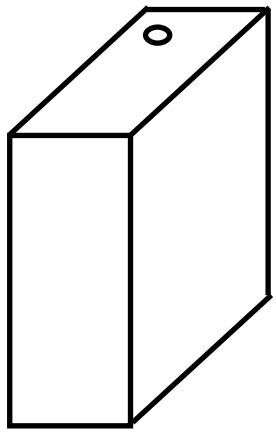

a) Shape

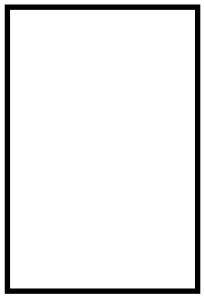

b) Side view

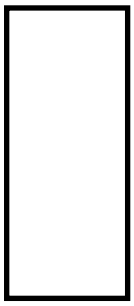

c) Front view

d) Top view

Figure 5-1: Metal box for housing

The hole at the upper side of the box is for antenna, which should be outside of the box in order to provide better communication with the receiving modem.

Part of the unit, which resides near circuit breaker, consists of two power supplies, Prometheus PC104 board (processor with data acquisition), board for signal conditioning and galvanic isolation, and wireless modem (with its power supply). Two power supplies are necessary because we need to separate the supply for both high and low voltage side of the circuit for galvanic isolation. As a power supply, the standard PC power supply was used (Figure 5-2).

Figure 5-2: PC Power supply

First one provided only the ground, 12V and –12V for high voltage side (before signal conditioning and galvanic isolation). The other provided ground, 12V, -12V for low voltage side, along with ground and 5V needed for power supply of the PC104 processor board.

Part of the unit residing near concentrator PC consists only of a wireless modem (together with its power supply). It should be connected via RS232 cable to the concentrator PC.

## 5.1 Wiring and assembling

First of all, power supply has to be provided for both PC104 board and board for conditioning and isolation.

Power connector at the isolation board has 6 pins and pin assignment is:

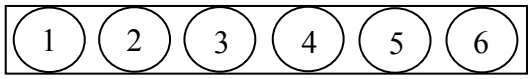


**1 ... Gnd1**

**2 ... $-V_{cc2}$**

**3 ... $+V_{cc2}$**

**4 ... Gnd2**

**5 ... $-V_{cc1}$**

**6 ... $+V_{cc1}$**

Figure 5-3: Power connector with pin assignments

The Numeration 1 is for low voltage side (after galvanic isolation), and 2 is for high voltage side (before conditioning and isolation). Voltage level is 12V for both Vcc. Three of them are connected to the first power supply (pins 1, 5 and 6), while the other three are connected to the second power supply (pins 2, 3 and 4).

Connector for input signals from circuit breaker is the same and pin assignments are shown in Figure 5-4. Since there are only two available channels, only two input signals are acceptable. Each input signal has two wires: positive and negative end. Output signals (pins 3 and for) are voltages referenced to Gnd1 from Figure 5-3. Since signal conditioning and galvanic isolation are performed, these signals can be directly wired to 50 pin connector (connector for data acquisition) on PC104 board, along with ground signal. Voltage drop between each output signal and ground cannot exceed 5 V (-5 V).

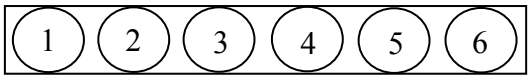


**1 ... +$In_1$**

**2 ... –$In_2$**

**3 ... $Out_1$**

**4 ... $Out_2$**

**5 ... –$In_2$**

**6 ... +$In_2$**

Figure 5-4: Signal connector with pin assignment

Ground1 from Figure 5-3, is connected to pin AGND (Analog ground) on 50 pin Data Acquisition connector of PC104 board. Two output signals are wired to Analog input 12 and Analog input 11. The reason for that is simple. We have 11 analog signals from circuit breaker, which we are not able to monitor because we have only two channels for signal conditioning and galvanic isolation. Since status signals Trip Event and Close Event have to be monitored, there is no room for any other analog signals from circuit breaker. 11 Analog signals are from Analog input 0 to Analog input 10. First two status signals are Trip Event and Close Event and they are assigned to Analog Input 11 and Analog input 12, respectively.

PC104 board requires 5V power supply and it is provided from one of the PC power supplies used for supplying board for conditioning and isolation.

Finally, wireless modem has to be connected to antenna and processor board through RS232 interface. One of the metal boxes contained antenna adapter, which connects antenna with wireless modem and allows antenna to be located outside the box, while modem can be located anywhere in the box. That box is used as housing for DAU part residing near circuit breaker. Other part of DAU residing near concentrator PC requires only wireless modem in the box with plenty of space available. In that box, the modem and antenna are connected directly through the hole at the top of the box.

## 5.2 DAU outlook

After wiring, two more tasks had to be completed. First was to make holes for screws necessary for attaching modules to the metal box. The other was to cut a metal box, so coolers of power supplies can be outside the box. Also, some wires (AC input for power supplies, input signals from circuit breaker) had to be located partly outside of the box and that is another reason why boxes had to be cut at certain locations. Outlook of the DAU, after everything was done, is shown in Figures 5-6, 5-7 and 5-8.

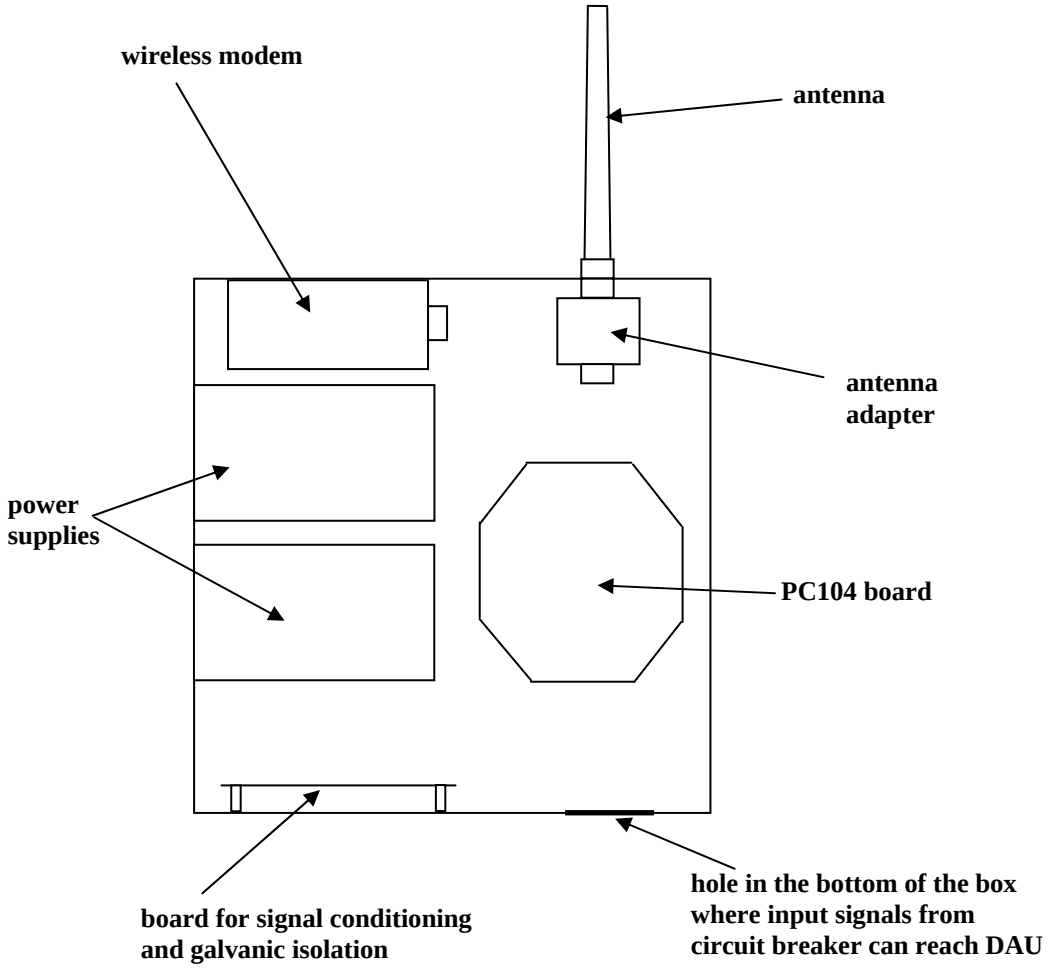


Figure 5-5: DAU (Side view)

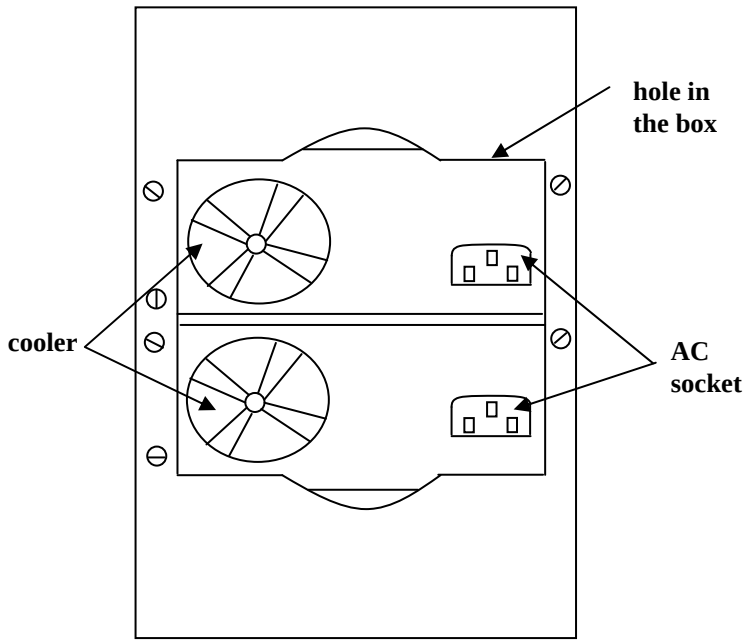


Figure 5-6: DAU (Rear view)

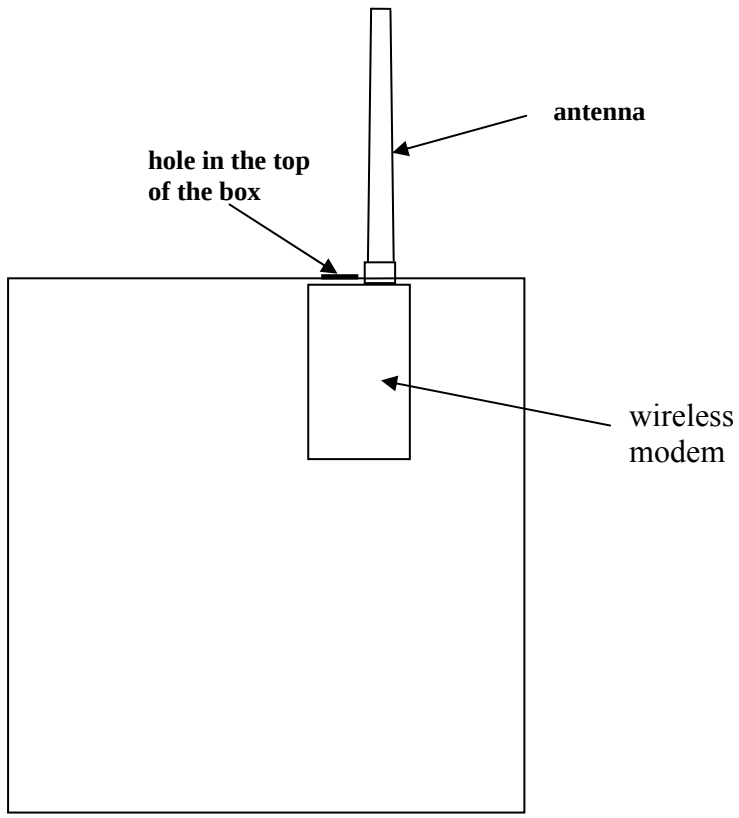


Figure 5-7: Part of DAU residing near concentrator PC

From the rear view shown in Figure 5-7, the coolers of power supplies can be noticed because of the holes made in the box.

In Figure 5-8 second part of DAU is shown. It doesn't have so many components inside, only wireless modem, while antenna is out of the box. There are also holes at the top of the box which allow power supply for the modem and RS232 cable to reach the modem.

Note: Although DAU would work with PC power supplies, after testing, we decided not to use them. Reason for that is the fact that PC power supplies are not isolated one from another, so even though we have power lines for two separate power supplies on our SCI module, the real isolation is not performed. From that point, for further testing, two power supplies (T-60C and T-40C from Mean Well [3]) with output of $\pm 15$V (2A,1.5A) were used as a power supplies. Outlook of DAU after mounting and wiring is shown in Figure 5-8:

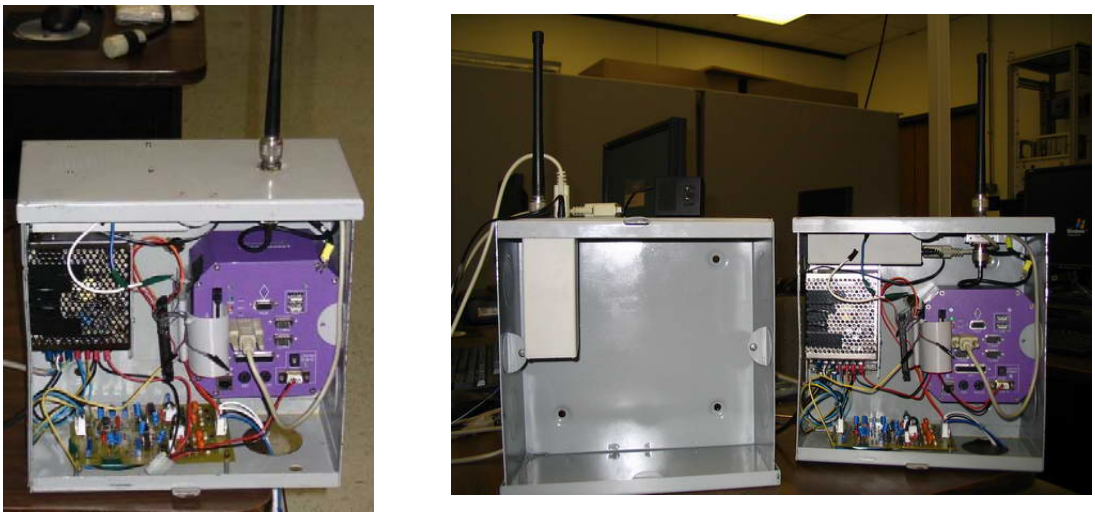

Figure 5-8: DAU outlook

[3] Datasheet can be found in a catalog

# Final report for FY 2005

# Hardware Implementation
# And Software Development

# CERTS Project
# Final Report for FY 05

Mladen Kezunovic
Maja Knezev
Zarko Djekic
Texas A&M University
January 18, 2005

## Acknowledgement

The work described in this report was coordinated by the Consortium for Electric Reliability Technology Solutions, and funded by the Office of Electric Transmission and Distribution, Transmission Reliability Program of the U.S. Department of Energy under Interagency Agreement No.DE-AI-99EE35075 with the National Science Foundation.

# HARDWARE IMPLEMANTION

We have developed two versions of CBM devices. In new version (CBM2) we implement new Signal Conditioning Board, Communication protocol and GPS time synchronization. Some of those upgrades we also implement on older version of devices (CBM1). In this stage of project CBM was tested in CNP substation O'Brian, South Houston.

## CBM 2

### SCB module

New signal conditioning board with 15 channels for CBM 2 is developed. This board has better over voltage protection on input side. This protection is realized using Zener diode voltage limiters. This provides that maximal voltage on input of amplifier is 220V, which is harmless for amplifier. SCB is tested using AVO test set and signal generator in lab. Test procedure is the similar as procedure used earlier. Only difference is that now we simulate all 15 channels, high voltage signals using AVO and low voltage using signal generator.

### Communication Protocol

Communication protocol for CBM provides multipoint communication and enables usage of several CBMs in one substation. We established point-to-multipoint communication system. Considering the fact that concentrator has to communicate with more than one DAU at the time, communication protocol is: concentrator is polling all of DAUs in scheduled way in order to determine if any of DAUs has a file to send. Polling is performed by sending code of the DAU according to the predetermined order. If polled DAU has a file to send, it is going to send a message of approval to the concentrator. After that, file is being sent to concentrator. Otherwise, DAU will send a message of disapproval to concentrator, which means that that DAU has no file to be sent at that time. After receiving message of disapproval concentrator is polling next DAU.Prior to sending file, DAU has to arrange bytes according to COMTRADE file specification. Master unit communicate with slaves usin comands. Commands are divided in two part. In first part master sends CBM ID and in second part it sends command to be executed.

## Time Synchronization

The data recorded at different circuit breakers in the substation must be synchronized in time in order for the analysis software to draw conclusions about the functioning of the system. For example, in a breaker and half configuration, two lines are connected to 3 breakers and two breakers must be opened to disconnect a faulty line from rest of the substation. Unless the data recorded from these to breakers in synchronized in time, accurate deductions about the abnormalities in line opening cannot be made. Time synchronized data may also be used for different applications, which analyze the working of the entire power system.

Data must therefore be synchronized to a universal time system. A GPS time system is ideal for this purpose. The records obtained must be time-stamped with GPS time. Most applications can work with data sampled at less than 10KHz. The maximum synchronization required is therefore 1/10Khz = 100 microseconds.
GPS receiver provides 1PPS signal, which is distributed through wireless transceiver to every CBM devices in substation. This signal is used to synchronize local clock on CBM with UTC. PC concentrator is connected to the GPS receiver through RS232.

## Slave unit software

The slave unit software are upgraded and it performs the following functions

- Control data acquisition parameters of the A/D converter namely sampling frequency, input range and record duration.
- Detect events and record data for specified duration in memory.
- Transmit data to master unit.
- Receive commands from master unit and execute them on slave unit.
- Synchronize local time on CBM with GPS clock receiver

The software is broken down into modules for ease of programming and testing. The modules integrate together to form the complete system software.

### CBM 1

Some of functions developed for CBM 2 are implemented on first devices: Time synchronization, communication protocol is implemented on the same way as on CBM 2. Those functions are tested in lab and substation with GPS clock.

## FIELD TESTING

The circuit breaker monitor was tested in a field setup at one of the local utility company's substations. The slave unit was set up at a breaker, which operates on a 345kV line. The slave unit hardware was made weatherproof by sealing the metallic box with a sealant.

The breaker is located at an approximate distance of 150m from the control house. It is connected to the laptop through an RS232 cable onto the serial port. The master side software is installed on the laptop and initialized to start reception. The temperatures at the test site can go as high as 150 F. The electronic components used in the design were chosen so as to meet the required temperature specifications. Data acquisition, event recognition, file transfer and communication protocol are tested during two months. Obtained signals are compared with referent signal.

## SOFTWARE DEVELOPMENT

Java version of single breaker analysis module (CBM Client application) is completely done and its architecture is shown on ***Fig. 1***. CBM device was installed in field and files automatically collected from device have been successfully processed by CBM Client application.

Part of circuit breaker monitoring application was developed earlier in Visual C++. After it was dependant of software tools that have been frequently changing and incompatible between each other an effort was placed on transforming the functions written in Visual C++ over to Java. The purpose of transforming the code to Java was to make complete single breaker analysis module independent of operating system and allow greater flexibility in the overall implementation of application.

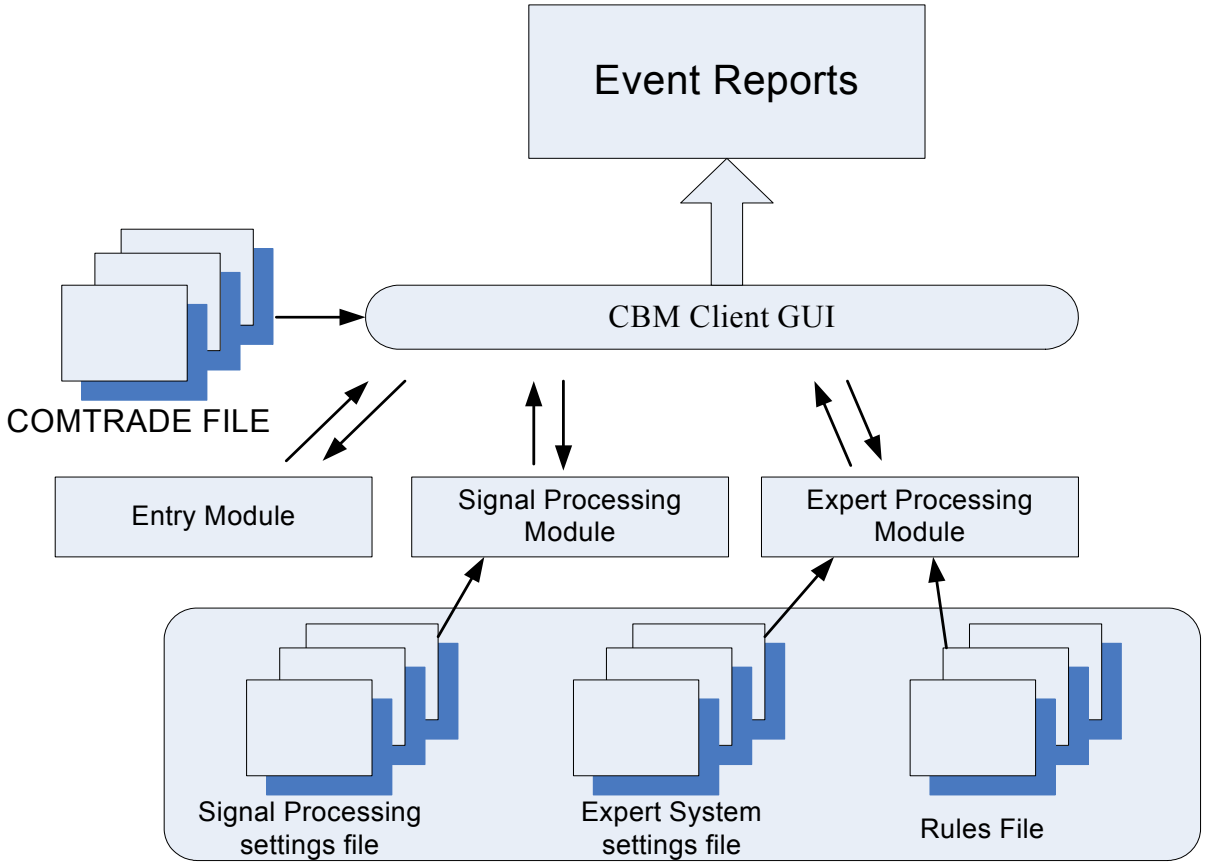


Figure 1: Architecture of single breaker Analysis Software

Program is able to process input COMTRADE files in IEEE 1991 and 1999 format. Output files are in an ASCII format and they contain information regarding identifying breaker, time of event and list of conclusions made out of analysis.

The next phase of project (FY06) will be focused on extending CBM Client application by incorporating automated analysis of the recordings collected during operations of a group of circuit breakers.

## References


[1] J. L. Blackburn, "Protective Relaying: Principles and Applications", *Marcel Dekker*, New York, 1998.

[2] P. M. Anderson, "Power System Protection", *McGraw-Hill*, New York, 1999.

[3] C. Christos, A. Wright, "Electrical Power System Protection", *Kluwer Academic Publishers*, Boston, 1999.

[4] IEEE standard C57.13-1993, "IEEE Standard Requirements for Instrument Transformers", *The Institute of Electrical and Electronics Engineers*, New York, 1994.

[5] M.I. Samesima, J.C. de Oliveira, E.M. Dias, "Frequency Response Analysis and Modeling of Measurement Transformers Under Distorted Current and Voltage Supply", *IEEE Transactions on Power Delivery*, Vol. 6, No. 4, pp. 1762-1768, October 1991.

[6] D. Tziouvaras, P. McLaren, et all, "Mathematical Models for Current, Voltage and Coupling Capacitor Voltage Transformers", *IEEE Transactions on Power Delivery*, Vol. 15, No. 1, pp. 62-72, January 2000.

[7] Lj. Kojovic, M. Kezunovic, S.L. Nilsson, "Computer Simulation of a Ferroresonance Suppression Circuit for Digital Modeling of Coupling Capacitor Voltage Transformers", *ISMM Conference on Computer Applications in Design, Simulation and Analysis*, Orlando, March 1992.

[8] IEEE Power System Relaying Committee Report, "Transient Response of Current Transformers", *The Institute of Electrical and Electronics Engineers*, New York, 1976.

[9] IEEE Committee Report, "Transient Response of Coupling Capacitor Voltage Transformers", Working Group of the Relay Input Sources Subcommittee of the Power System Relay Committee, *IEEE Transactions on Power Apparatus and Systems*, Vol. PAS-100, No. 12, December 1981.

[10] IEEE/PSRC Working Group I3, "Transmission Protective Relay System Performance Measuring Methodology", The Institute of Electrical and Electronics Engineers, New York, 1999. Available online: http://www.pes-psrc.org/.

[11] Group of authors, *IEEE Std. C57.113-1994: IEEE Standard Requirements for Instrument Transformers*, The Institute of Electrical and Electronics Engineers, New York, 1994.

[12] M. Kezunovic, B. Naodovic, "Task #1 Report: Performance Shortcomings of Conventional Instrument Transformers", *PSERC Project T-22 Report*, Texas A&M University, July 2004.

[13] Lj. A. Kojovic, "Impact of Current Transformer Saturation on Overcurrent Protection Operation," *IEEE Power Engineering Society Summer Meeting*, Vol. 3, pp. 1078-1083, July 2002.

[14] H.O. Pascual, J.A. Rapallini, "Behaviour of Fourier, Cosine and Sine Filtering Algorithms for Distance Protection, Under Severe Saturation of the Current

Magnetic Transformer," *IEEE Porto Power Tech Proceedings*, Vol. 4, September, 2001.

[15] M.A. Hughes, "Distance Relay Performance as Affected by Capacitor Voltage Transformers", *Proceedings of IEE*, Vol. 121, No. 12, pp. 1557-1566, December 1974.

[16] W.D. Humpage, K.P. Wong, "Influence of Capacitor-Voltage-Transfomers on the Dynamic Response of Distance Protection," *Electrical Engineering Transactions*, The Institution of Engineerings, Australia, Vol. EE14, No. 2, pp. 59-63, 1978.

[17] E. A. Udren, J. A. Zipp, "Proposed Statistical Performance Measures for Microprocessor-Based Transmission-Line Protective Relays, Part 1: Explanation of the Statistics," *IEEE Transactions on Power Delivery*, Vol. 12, No. 1, pp. 134-143, January 1997.

[18] M. Kezunovic, B. Kasztenny, "Design Optimization and Performance Evaluation of the Relay Algorithms, Relays and Protective Systems Using Advanced Testing Tools," *IEEE Transactions on Power Delivery*, Vol. 15, No. 4, pp. 1129-1135, October 2000.

[19] Power Measurement, ION8400 Features Summary, available online: http://www.pwrm.com.

[20] D. Ristanovic, S. Vasilic, M. Kezunovic, "Design and Implementation of Scenarios for Evaluating and Testing Distance Relays," *North American Power Symposium - NAPS*, College Station, Texas, October 2001.

[21] D. Tziouvaras, P. McLaren, C. Alexander, D. Dawson, J. Esztergalyos, C. Fromen, M. Glinkowski, I. Hasenwinkle, M. Kezunovic, L. Kojovic, B. Kotheimer, R. Ruffel, J. Nordstrom, S. Zochol, "Mathematical Models for Current, Voltage and Coupling Capacitor Voltage Transformers," *IEEE Transactions on Power Delivery*, Vol. 15, No. 1, pp. 62-72, January 2000

[22] R. C. Dugan, M. F. McGranaghan, H. W. Beaty, *Electrical power systems quality*, McGraw-Hill, New York, 1996.

# PART 2

# Software Requirements Specification

# Table of Contents

1. Background Information ..... 1
1.1 Basics of Circuit Breaker Operation ..... 1
1.1.1 Trip Operation ..... 2
1.1.2 Close Operation ..... 3
1.1.3 Trip and Close Sequences ..... 4
1.1.4 Conclusion ..... 5
1.2 Analysis of the Sequence of Operations ..... 6
1.2.1 Reference Sequence for Breaker-and-a-half Bus Arrangement ..... 7
1.2.2 Breaker Failure Logic ..... 9
1.2.3 Reference Sequence for a Single Breaker ..... 10
1.2.4 Failure of single sequence ..... 12
1.2.5 Summary of Potential Problems with Circuit Breaker Operation ..... 14
1.3 Conclusion ..... 16
2. Software Requirements Specification ..... 17
2.1 System Architecture ..... 17
2.1.1 GPS synchronization and time stamping ..... 19
2.1.2 Phasor Measurement Enabled IEDs ..... 20
2.2 Application Software ..... 21
2.2.1 Signal Processing Analysis ..... 21
2.2.2 Expert System Analysis ..... 21
2.2.3 Expert System ..... 22
2.2.3.1 Expert System Rules ..... 23
2.2.3.2 Configuration file facts ..... 23
2.2.4 Designation of the user type ..... 26
2.2.5 Graphical User Interface ..... 27
2.2.6 Reporting and archiving ..... 28
2.2.7 Formats for Input/Output files ..... 29
2.2.8 Conclusion ..... 31
3. Software Test Plan ..... 32
3.1 Data Requirements ..... 32
3.2 Data Classification ..... 33
3.2.1 Data Validation ..... 33
3.2.2 Normal Circuit Breaker Operation ..... 34
3.2.3 Abnormal Circuit Breaker Operation ..... 34
3.2.4 Conclusion ..... 35
3.3 Test Plan ..... 35
REFERENCES ..... 37
APPENDIX ..... 38

## Table of Figures

**Figure 1.1** Trip operation ..... 2
**Figure 1.2** Close operation ..... 3
**Figure 1.3** Example power system ..... 6
**Figure 1.4** Breaker and a half one-line diagram ..... 7
**Figure 1.5** Sequence of opening corresponding breakers in case of fault on Line1 ..... 8
**Figure 1.6** Sequence of opening corresponding breakers in case of fault on BUS A ..... 8
**Figure 1.7** Breaker failure logic in case of CB1 failure during fault on Line1 ..... 9
**Figure 1.8** Breaker failure logic in case of CB2 failure during fault on Line1 ..... 10
**Figure 1.9** Trip and reclose sequences on a single breaker ..... 10
**Figure 1.10** Algorithm, describing autoreclosing sequences on a single breaker ..... 11
**Figure 1.11** Fault present on Line3 ..... 12
**Figure 1.12** Unsuccessful reclosing on one of breakers ..... 13
**Figure 2.1** System architecture (Substation Level) ..... 17
**Figure 2.2** System architecture (System Level) ..... 18
**Figure 2.3** Placement of PMU's in WAMS ..... 20
**Figure 2.4** Signal processing module ..... 21
**Figure 2.5** Event analysis module ..... 21
**Figure 2.6** Expert system structure ..... 22
**Figure 2.7** Typical four-circuit breaker-and-a-half bus ..... 24
**Figure 2.8** Generating physiscal configuration file of the equipment architecture ..... 25
**Figure 2.9** Client application architecture ..... 27
**Figure 2.10** E/R diagram of database ..... 28
**Figure 2.11** Input/output files ..... 29
**Figure 3.1** Breaker CBM1 .HDR file ..... 32

## Table of Tables

**Table 1.1** Trip Sequence....4
**Table 1.2** Close Sequence....4
**Table 1.3** Comparing sequences to find out where the fault is....14
**Table 1.4** Abnormalities that consist of opening events....15
**Table 2.1** Description of substation configuration....24
**Table 2.2** Designation of user types....26
**Table 2.3** Keywords inside COMTRADE configuration file....30
**Table 3.1** Required signals....34
**Table A.1** Comment- Close....34
**Table A.2** Comment....34
**Table A.3** Format of the comment section....34

# 1. Background Information

## 1.1 Basics of Circuit Breaker Operation

In order to efficiently and completely specify the requirements for the automated analysis of the recordings collected during operations of a group of circuit breakers, it is important to establish a solid understanding of the circuit breaker operation and expected sequences of operation of a group of circuit breakers.

Sections 1.1.1 and 1.1.2 discuss common trip and close sequences of a single circuit breaker. Representation of the electrical signals in these sections has been simplified for the purposes of giving a clear and straightforward description. Detailed description of a common circuit breaker control circuit schematic and corresponding signals that characterize its performance is already given in [1].

A system to analyze each file received from individual circuit breaker is completely developed and tested earlier through direct funding provided by CenterPoint Energy. This analysis determines status of a single CB. Based on the analysis it is possible to find out precisely whether CB is opened or closed, but it is still not possible to know whether a given CB operated synchronously with other CBs as expected. Finding out whether sequence of operations of a group of CBs is correct is the purpose of further analysis that will be presented in section 1.2.

### 1.1.1 Trip Operation

A trip operation is designed to interrupt the currents flowing through the breaker. Fig 1.1 shows the signal names from a record collected by CBM device listed along the left-hand side of the plots. The figure also displays the sequence of transitions that the signals go through in the opening process. The plots are shown for the ideal case in which there is no noise during transitions, the trip current has a perfect slope on its ramp up and ramp down transitions, and the contacts change state instantaneously.

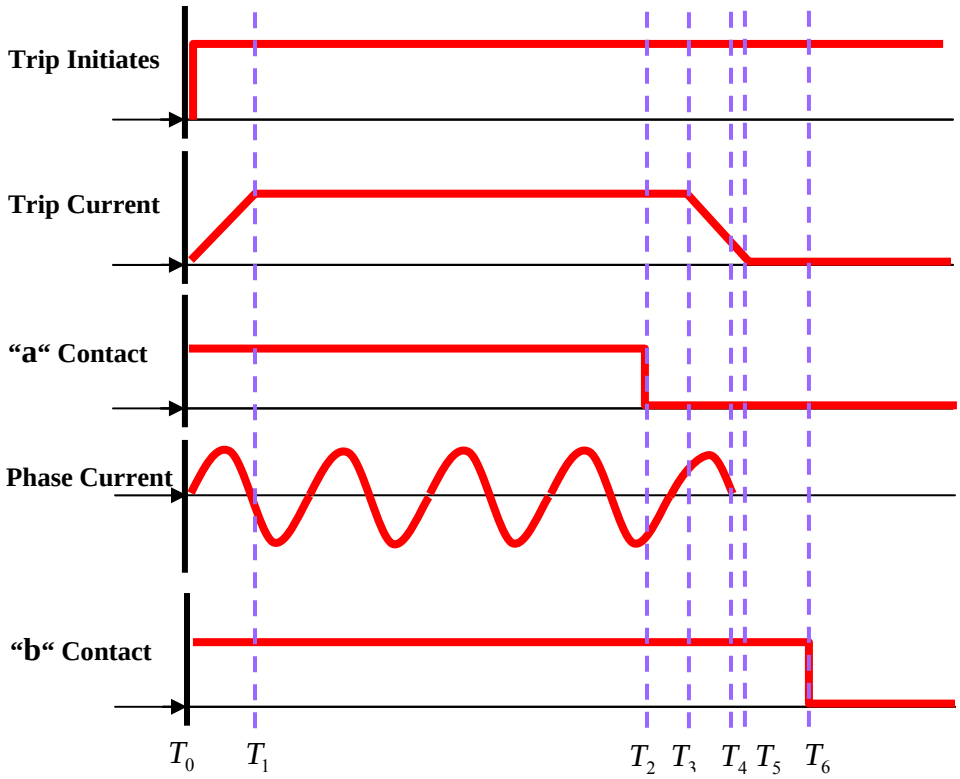


Fig. 1.1: Trip operation

The signals affected by the trip operation include **Trip Initiate, Trip Current, a Contact, Phase Currents,** and **b Contact**. They are shown in Fig 1.1 in the order in which the transitions occur. In the above figure, only one phase current is shown for simplification. Prior to trip (open) operation, the circuit breaker is in a closed position with currents flowing in all three phases as shown in the figure.

The trip operation shown above is representative of a typical opening sequence. Each breaker may have slight differences in the order in which certain changes take place. Some of the changes may take place at approximately the same time. For example, it is very common for the "a" Contact voltage to go to zero at about the same time as the Trip Current begins to ramp down towards zero. It is not necessary for those two changes to take place at precisely the same time.

### 1.1.2 Close Operation

A close operation is aimed at establishing current flow through the breaker. Fig 1.2 shows the standard signal names used in the CBM listed along the left-hand side of the plots. The figure also displays the sequence of transitions that the signals go through in the close process. Again, the plots are shown for the ideal case in which there is no noise during transitions, the trip current has a perfect slope on its ramp up and ramp down transitions, and the contacts change state instantaneously.

The signals affected by the close operation include **Close Initiate, X Coil, Close Current, b Contact**, **Phase Currents, a Contact, Y Coil**. They are shown in Fig 1.2 in the order in which the transitions normally occur. Prior to the close operation, the circuit breaker is physically in an open position with no current flowing in any of the phases. Note that all of the signals except Control DC and Yard DC are zero at time $C_0$.

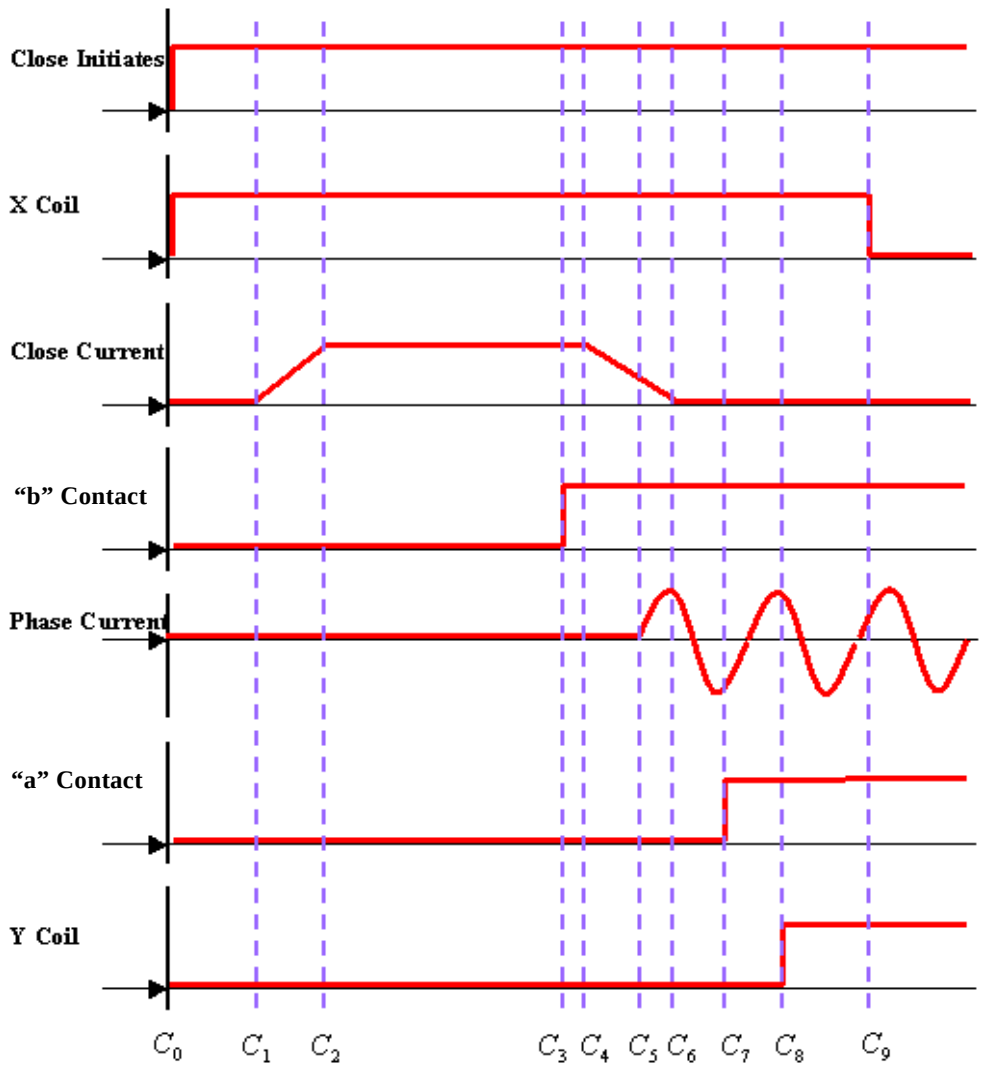


Figure 1.2: Close operation

As in the case of the trip operation, the close operation shown above is representative of a typical close sequence. Each breaker may have slight differences in the order in which certain changes take place. Some of the changes may take place at approximately the same time. For example, it is very common for the b Contact voltage to go to a high value at about the same time as the Close Current begins to ramp down towards zero. However, it is not necessary for those two changes to take place at precisely the same time.

### 1.1.3 Trip and Close Sequences

Fig 1.1 and Fig 1.2 displayed typical trip and close operations but they did not show all the possible sequences that can occur regarding signal changes. Since each breaker has a slightly different sequence, a number of different sequences that could occur may still result in a valid circuit breaker operation. Table 1.1 and 1.2 define the time boundaries within which the trip and close operations must remain to be considered normal.

Table 1.1: TRIP SEQUENCE

| Time | Must Come Before * | Must Come After * |
|---|---|---|
| T1 | T2, T3, T4, T5, T6 | T0 |
| T2 | T3, T4, T5, T6 | T0, T1 |
| T3 | T5, T6 | T0, T1, T2 |
| T4 | T6 | T0, T1, T2 |
| T5 | T6 | T0, T1, T2, T3 |
| T6 | --- | T0, T1, T2, T3, T4, T5 |

Table 1.2: CLOSE SEQUENCE

| Time | Must Come Before * | Must Come After * |
|---|---|---|
| C1 | C2, C3, C4, C5, C6, C7, C8, C9 | C0 |
| C2 | C3, C4, C5, C6, C7, C8, C9 | C0, C1 |
| C3 | C7, C8, C9 | C0, C1, C2 |
| C4 | C9 | C0, C1, C2 |
| C5 | C7, C9 | C0, C1, C2, C3 |
| C6 | C9 | C0, C1, C2, C3 |
| C7 | C8, C9 | C0, C1, C2, C3, C4, C5, C6 |
| C8 | C9 | C0, C1, C2, C3, C7 |
| C9 | --- | C3, C7, C8 |

*Note: The first column contains the time labels of the events characteristic for the trip sequence. The events in the first column must occur before or after the events listed in second and third column, respectively. No interrelationship should be placed upon each individual time sequence in second and third columns.*

From the information contained in Table 1.2 and Fig 1.2 it can be concluded that the transitions C3, C7, C8, and C9 associated with the signals **b Contact, a Contact, Y Coil** and **X Coil,** respectively, are all tied together in a sub-sequence. In other words, the **b Contact** transition must come before the **a Contact** transition, the **a Contact** transition must come before the **Y Coil** transition, and the **Y Coil** transition must come before **X Coil** transition. The **B-A-Y-X** sub-sequence is allowed to float along the time axis and is somewhat independent of the other signals. The only restriction that is placed on this sub-sequence is that time C3 (**b Contact**) must come after time C2 (Close Current).

Another conclusion that can be made from Table 1.2 and Fig 1.2 is that the transition at C5 associated with **Phase Current** must come after C0 (**Close Initiate & X Coil**) and C1 & C2 (**Close Current**). The CI-X-CC sub-sequence is also allowed to float along the time axis provided that it occurs after C2.

### 1.1.4 Conclusion

The operation of the circuit breaker can be described by the change in the elements that make up the electrical schematic, as well as with the electrical signals that flow within the control circuit. Each element in the schematic has a specific function and purpose in the breaker operation. The function of each element is characterized by a corresponding signal waveform. The trip and close sequences shown in Fig 1.1 and Fig 1.2 clearly demonstrate that the operation of a breaker can be described in terms of the signals that flow within its control circuitry. There are specific points marked on the plots that show times when the signals make a transition from one state to another. These points may serve as good indicators that the future monitoring system can use to determine problems in the breaker operation. This analysis gives information about behavior and status of a single breaker. The purpose of this document is to develop software specification aimed at the analysis that could determine precise switching status of all CBs at every time instance. Even if single operation was finished successfully, we do not know whether this operation was executed as expected. The most important aspect of the analysis is that besides getting the information from the contacts, CBM device measures phase currents, which enables us to know more precisely momentary status of CBs.

## 1.2 Analysis of the Sequence of Operations

The purpose of a power system is to generate and provide electrical energy to customers. A power system consists of diverse equipment, which is very expensive. In order to build reliable protection system it is important to detect faults and disconnect vulnerable elements of the power system fast. Fig 1.3 shows a hypothetical power system.

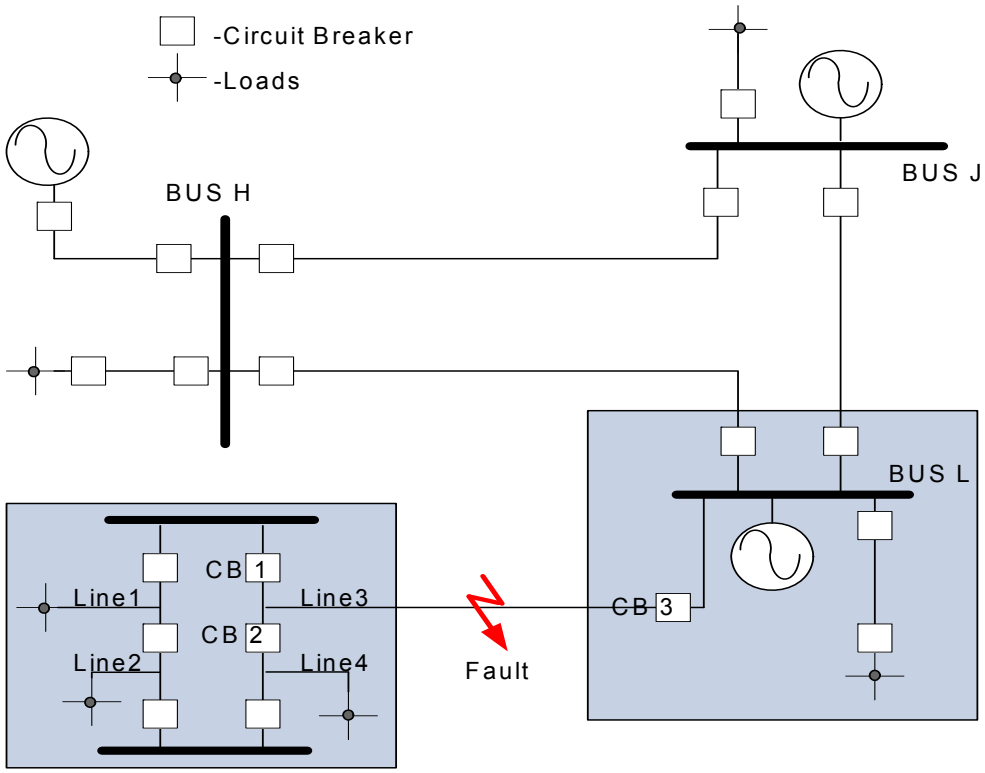


Fig. 1.3: Example power system

Circuit breakers (CBs) have the purpose to automatically connect or disconnect different parts of the power system in order to isolate the faults and/or re-route the power flow. When there is a fault on an element in the system, it is necessary to open all circuits supplying fault current very fast. In order to open all circuits that supply fault current, more than one circuit breaker typically reacts. Bus arrangement is used to minimize the number of circuits that must be opened in a case of a fault [2]. Depending on a bus arrangement and status of breakers, different breakers will automatically react in case of different faults.

Power system may have to be expanded to meet the growing demand for electrical energy. In order to satisfy increased demand new substations are built and old ones are upgraded. It is common that bus arrangements vary widely from substation to substation. In practice many different solutions can be found. Most common arrangements in the high voltage systems in the USA are breaker-and-a-half (Fig 1.4) and ring bus arrangement. In the case that there is fault on Line 3 (Fig 1.3), corresponding breakers from both ends of Line3 (in this case CB1, CB2 and CB3) will open and de-energize the line to get rid off temporary fault. During the action to disconnect an element, various

breakers will react differently depending on the bus arrangement and type of fault (temporal or permanent). Purpose of the proposed analysis should be finding out whether sequences of events were executed correctly according to the bus arrangement and cause of the action.

System operators will normally be interested in knowing the state of all the circuit breakers under their control. CBM device collects all the control signals relevant to circuit breaker operation and performs detailed analysis of circuit breaker performance. In the case that operation is not correct, maintenance personnel and operators are informed. Maintenance of circuit breakers operating mechanism and contacts can be performed as soon as any kind of deviation is noticed. In order to perform maintenance that requires access to the circuit breaker, it is necessary that the breaker is de-energized during check. In that case breaker is opened manually. For the proposed analysis, it is important to distinguish between automatic and manual operations of circuit breakers. Circuit breakers are manually initiated to interrupt currents related to normal operating conditions. This is usually done for maintenance purpose or during re-configuration of substations. Corresponding signal that initiates manual opening of a circuit breaker does not come from protective relays as in the case of automatic operation, and automatic reclosing logic is inhibited when manual trip is executed. Automatic reclosing logic will be discussed in section 1.2.3.

### 1.2.1 Reference Sequence for Breaker-and-a-half Bus Arrangement

A typical breaker-and-a-half bus arrangement is shown on Fig 1.4. Further analysis will be presented for the bus arrangement from this figure.

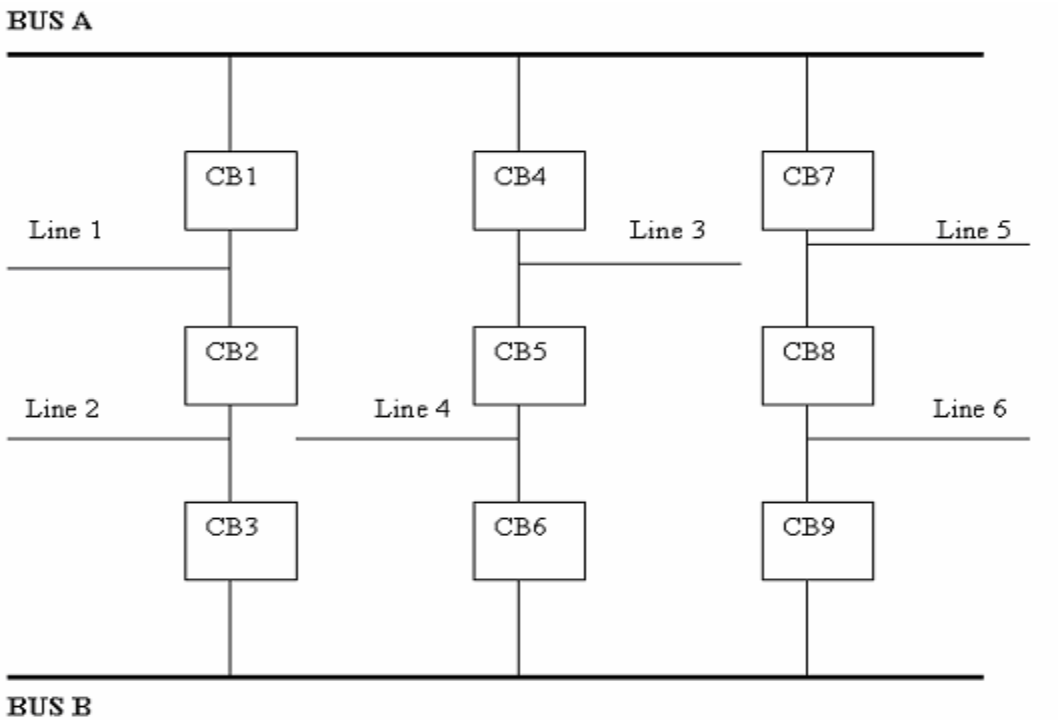


Fig. 1.4: Breaker and a half one-line diagram

**A.** In the case of a fault on Line1, protective relay(s) should send trip signals to CB1, CB2 and corresponding breakers on the other side of the line. They should open and disconnect faulted Line1 from the rest of the circuit. Corresponding sequence of opening for this case is shown on Fig 1.5.

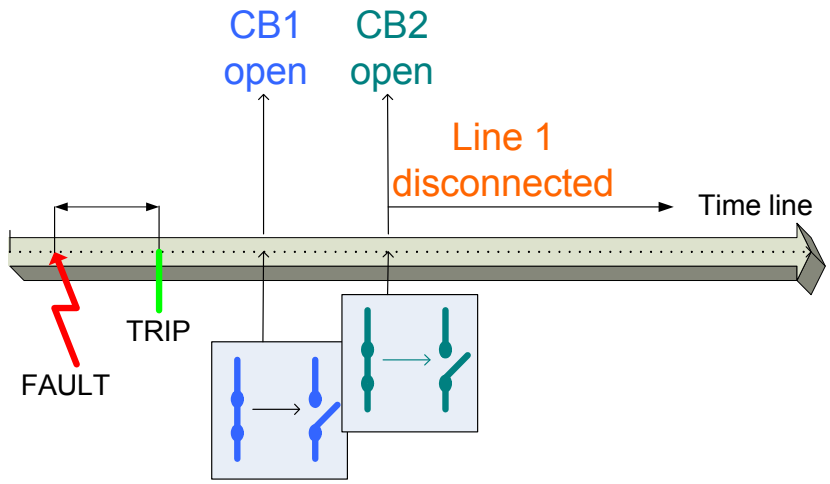


Fig. 1.5: Sequence of opening corresponding breakers in case of fault on Line1

The CBM device sends event files to the Client application in substation. Events are processed. If both breakers in this case are successfully opened and events on breakers CB1 and CB2 happened between TRIP time and (TRIP time + tolerance time) we consider Line 1 opening successful. If one of the breakers gets stuck software will inform the user and the breaker failure logic is executed. Breaker failure logic is further discussed in section 1.2.2. Tolerance time depends of the type of breaker.

**B.** In the case of a fault on BUS A, the bus relay should send trip signals to CB1, CB4, CB7 and all other breakers connected to the faulted section of BUS A. Corresponding sequence of opening for this case is shown on Fig 1.6.

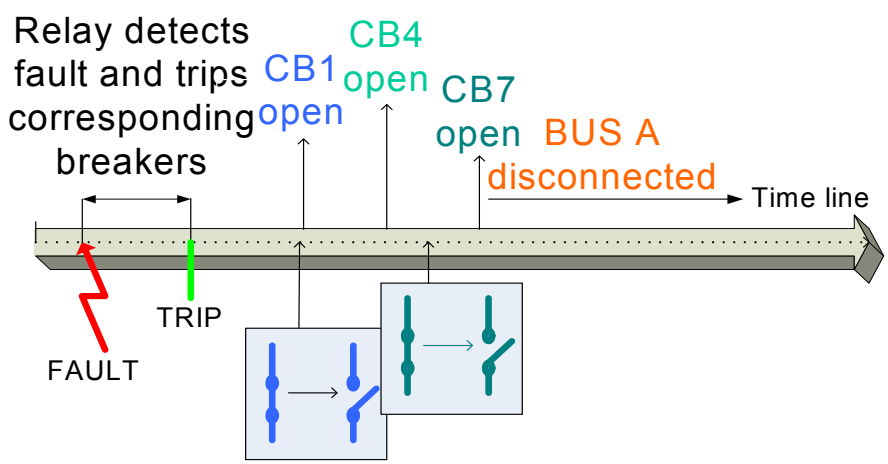


Fig. 1.6: Sequence of opening corresponding breakers in case of fault on BUS A, where we take into account only elements from Fig 1.4

Similar to the previous situation if all breakers are successfully opened before *(TRIP time + tolerance time)* we consider BUS A disconnected from breaker-and-a-half arrangement shown on Fig 1.4. Accidental operation of BUS protection might cause widespread outage. If not quickly cleared, bus fault may cause substantial equipment damage as well. The possibility of incorrect operation has in the past, led to hesitation in applying bus protection [2]. Because of that many elements are redundant in BUS protection.

### 1.2.2 Breaker Failure Logic

Circuit breakers start an opening sequence after they get trip command from protective relays. The relays observe whether fault is present. If they recognize the fault they send the trip signal to corresponding breakers according to the zone of protection. Besides primary protection zone, relays may operate properly in reponse to coditions outside this zone [3]. In case that one of the breakers was not opened succesfully in the examples shown in previous section, breaker failure logic is initiated. Breaker failure logic is executed automatically.

In case **A** in section 1.2.1 if CB1 gets stuck, BUS A should be disconnected by opening all breakers on BUS A in Fig 1.7.

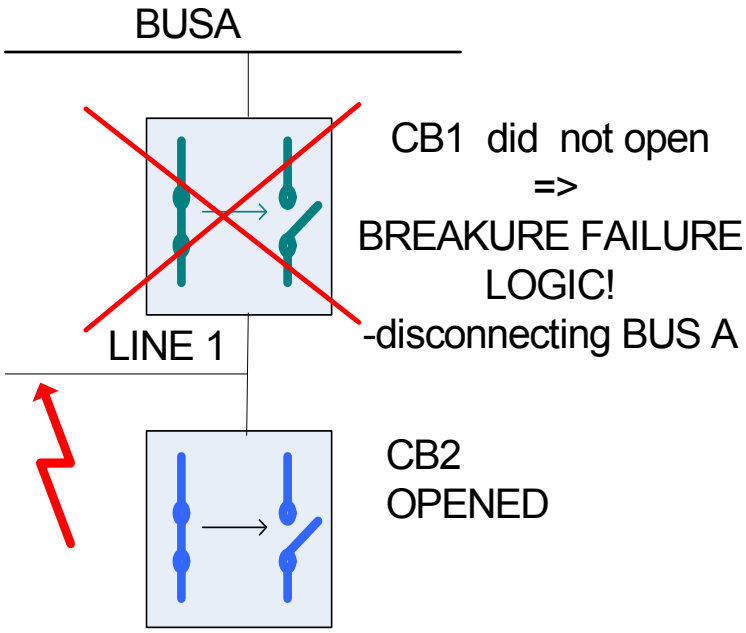


Fig. 1.7: Breaker failure logic in case of CB1 failure during fault on Line1

In case **A** in section 1.2.1 if CB2 gets stuck neighbouring breakers should be opened, in this case breakers CB3 and corresponding breakers on the other side of Line2 are tripped Fig 1.8.

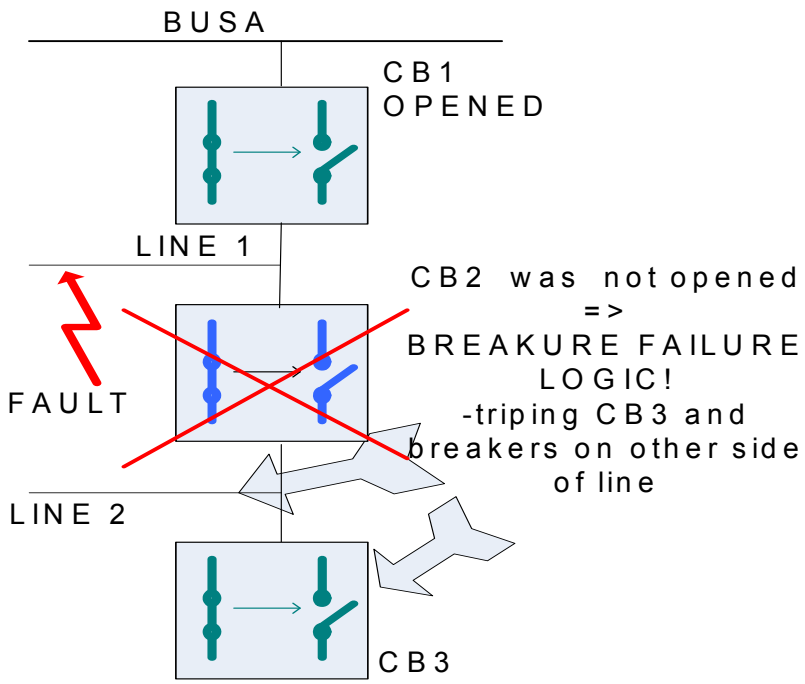


Fig. 1.8: Breaker failure logic in case of CB2 failure during fault on Line1

### 1.2.3 Reference Sequence for a Single Breaker

As mentioned earlier, in order to open circuits that supply fault current corresponding circuit breakers should react. After some time circuit breaker assumes that fault is cleared and it will try to reclose itself automatically. Typical sequences occurring because of a fault present somewhere on a transmission line is shown on Fig 1.9.

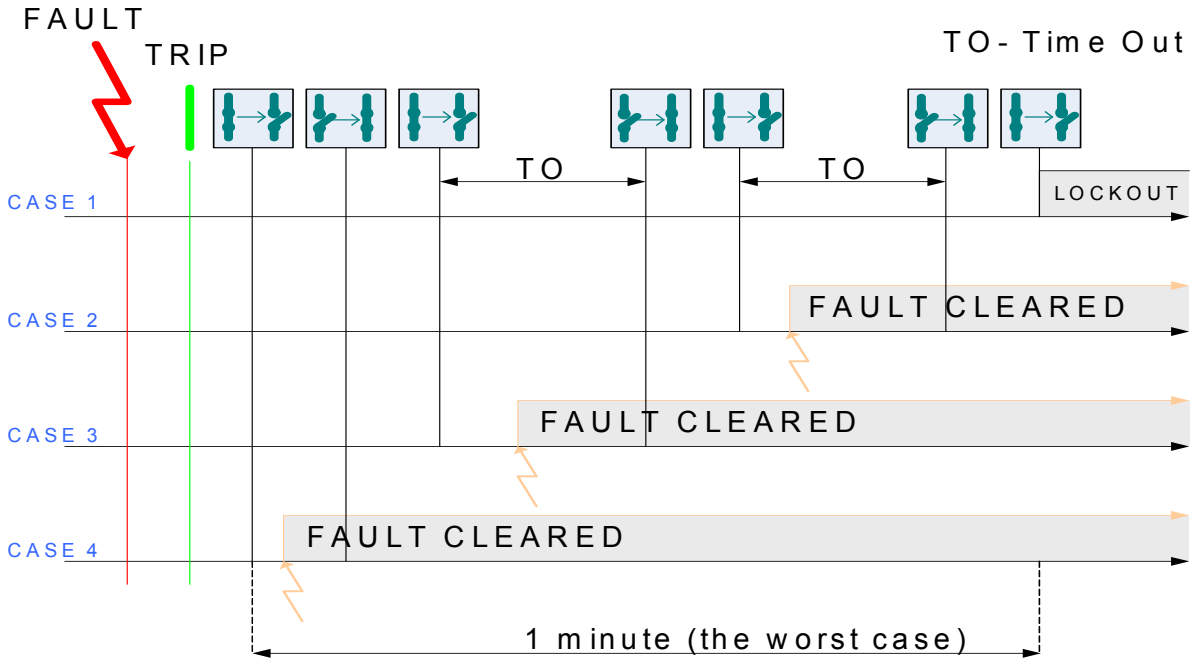


Fig. 1.9: Trip and reclose sequences on a single breaker

Process of reclosing can be repeated a couple of times as Fig. 1.9 shows and it is initiated in order to determine whether fault, which caused opening of breaker, is still present. Beginning sequence consists of three stages:

- TRIP EVENT (fault is present)
- CLOSE EVENT (to see if the fault is gone)
- TRIP EVENT AGAIN (if the fault is still present)

If a fault is still present it will be given some time to be cleared, this time is called TIME OUT time. TIME OUT usually depends on type of breaker and the voltage level. The reclosing of the breaker consists of two stages:

- CLOSE EVENT (to see if the fault is gone)
- TRIP EVENT AGAIN (if the fault is still present)

In the case that fault is present after a reclosing, breaker will wait for the time out to pass and initiate reclosing again. If after selected number of attempts of reclosing fault is still present, lockout is taking place. There will be no more attempts to reclose automatically the breaker again. Algorithm showing behavior described above is shown on Fig 1.10**.**

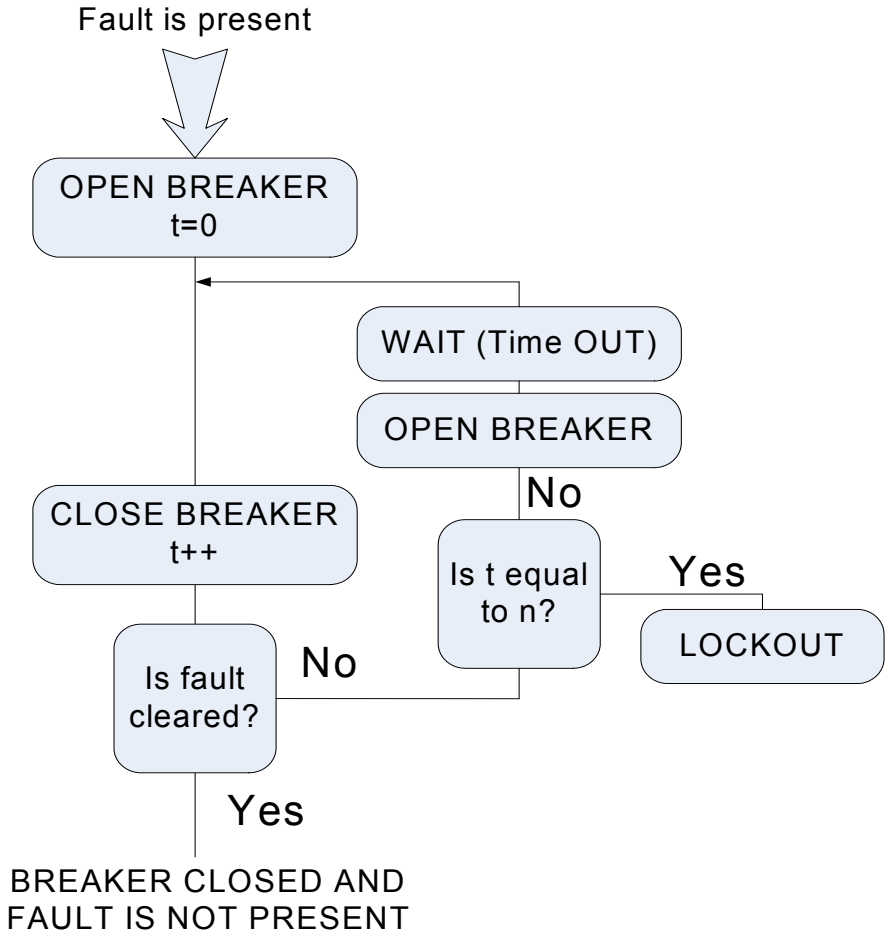


Fig. 1.10: Algorithm, describing autoreclosing sequences on a single breaker

The length of sequences and time outs depend not only on the type of the breaker, but also on location of the circuit breaker. These values differ from breaker to breaker and they represent one of the inputs that should be given when describing circuit breakers present in the area of observation.

In case that lockout took place, special order is issued by the operators for the breaker to be made active again once an inspection of the breaker and analysis of the causes are completed.

### 1.2.4 Failure of single sequence

Circuit breakers are the switching elements initiated automatically by commands (signals) sent by protection relays. The relays send trip signals to different CBs. In the case these breakers fail to operate, breaker failure logic sends commands to different breakers. One relay may send trip signals to more than one CB. After receiving a trip signal, automatic reclosing logic is initiated for each breaker, which is internal for each CB. If after reclosing the fault is still present, relay will initiate trip signal again to the same group of breakers. What can be concluded is that as long as fault is present protective relay will send trip signal to the same breakers. The switching sequences for a group of breakers will be the same for all CBs from that group. Depending on the type of the relay and relaying scheme deployed, different breakers will be initiated.

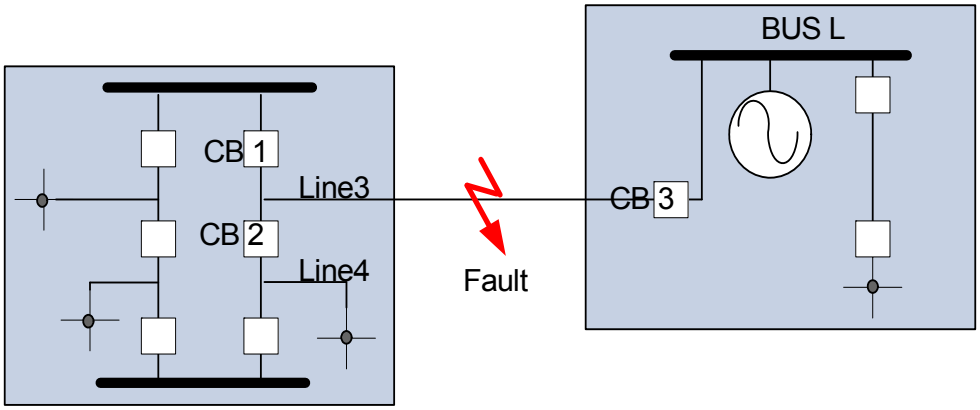


Fig. 1.11: Unsuccessful reclosing on one of breakers

In the case of fault on Line 3 shown on Fig 1.11 group of breakers should behave the same in order to de-energize fault. CB1, CB2 and CB3 should open. Typical example of the failure in a single sequence is shown on Fig 1.12, where although fault was cleared, CB3 was not closed automatically as the other breakers did.

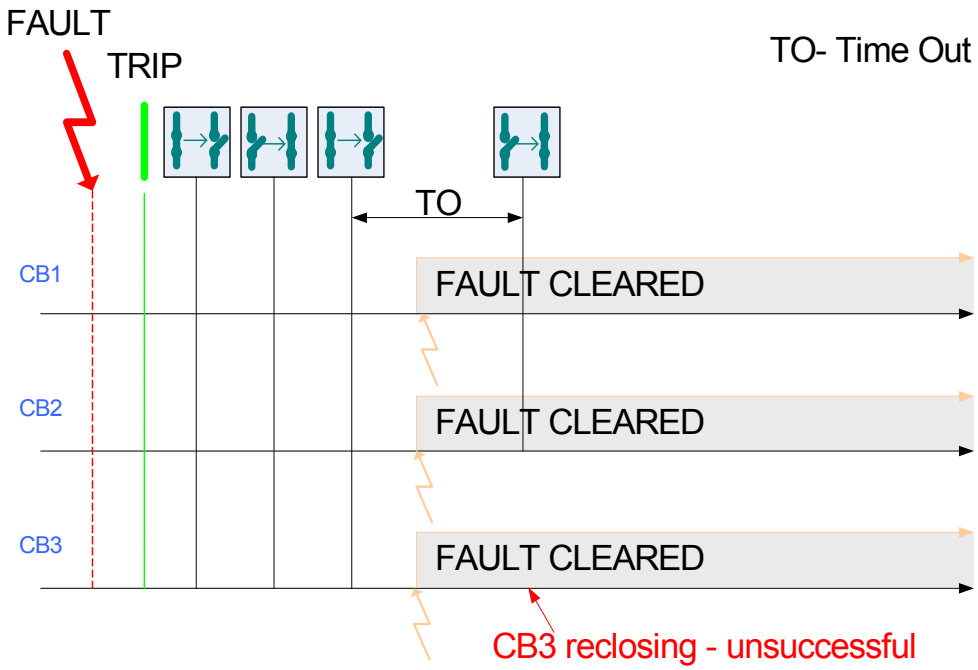


Fig. 1.12: Unsuccessful reclosing on one of breakers

By comparing these sequences, we can find out that unsuccessful reclosing of circuit breaker caused part of the network to stay disconnected. CB3 did not behave as the rest of the group and that alarms user that sequence executed on CB3 was not regular. If there was not information about behavior of other breakers, we could consider fault permanent, causing CB3 to lockout.

We can recognize one more case related to abnormalities of single sequence on a single breaker. It is already said that the length of sequences and time outs depend on the type of the breaker. If we keep track of common values for the length of these sequences for each circuit breaker, we can recognize if there are some abnormalities related to these sequences simply by comparing length of sequence with a common one for that breaker. In case that we recognize that difference in these two values is bigger than what the tolerance allows, we can inform user immediately, by sending a detailed report about circuit breakers behavior.

### 1.2.5 Summary of Potential Problems with Circuit Breaker Operation

In fault situations, faulted sections are disconnected by opening corresponding CBs. The software will compare event files from breakers in order to find out which section is faulted. Table 1.3 shows which group of breakers is executed in case of different faulted sections for bus arrangement shown on Fig 1.4.

Table 1.3: COMPARING SEQUENCES TO FIND OUT WHERE THE FAULT IS

| **Event files from breakers with the same trip stamp** | **Behavior of CB** (1-successful, 0-unsucc.) | **Diagnosis** | **Fault on** |
|---|---|---|---|
| CB1, CB4, CB7 | 1,1,1 | Successful opening | **BUSA** |
| | 1,1,0 | CB7 Failure | |
| | 1,0,1 | CB4 Failure | |
| | 0,1,1 | CB1 Failure | |
| CB3, CB6, CB9 | 1,1,1 | Successful opening | **BUSB** |
| | 1,1,0 | CB7 Failure | |
| | 1,0,1 | CB4 Failure | |
| | 0,1,1 | CB1 Failure | |
| CB1, CB2 | 1,1 | Successful opening | **LINE 1** |
| | 1,0 | CB2 Failure | |
| | 0,1 | CB1 Failure | |
| CB2, CB3 | 1,1 | Successful opening | **LINE 2** |
| | 1,0 | CB3 Failure | |
| | 0,1 | CB2 Failure | |
| CB4, CB5 | 1,1 | Successful opening | **LINE 3** |
| | 1,0 | CB5 Failure | |
| | 0,1 | CB4 Failure | |
| CB5, CB6 | 1,1 | Successful opening | **LINE 4** |
| | 1,0 | CB6 Failure | |
| | 0,1 | CB5 Failure | |
| CB7, CB8 | 1,1 | Successful opening | **LINE 5** |
| | 1,0 | CB8 Failure | |
| | 0,1 | CB7 Failure | |
| CB8, CB9 | 1,1 | Successful opening | **LINE 6** |
| | 1,0 | CB9 Failure | |
| | 0,1 | CB18 Failure | |

Table 1.4 shows the events and analysis report for breaker-and-a-half bus arrangement shown on Fig 1.4.

Table 6.4: ABNORMALITIES THAT CONSIST OF OPENING EVENTS (Fig. 1.4)

| Event | CB Behavior | Figure | Expected Event | If expected event is successful |
|---|---|---|---|---|
| **Fault on BUS A** | CB1 Failure | **Fig 1.8** | Opening CB2 | BUS A opened, CB1 breaker failure logic successfully executed. |
| | CB4 Failure | | Opening CB5 | BUS A opened, CB4 breaker failure logic successfully executed. |
| | CB7 Failure | | Opening CB8 | BUS A opened, CB7 breaker failure logic successfully executed. |
| **Fault on BUS B** | CB3 Failure | **Fig 1.8** | Opening CB2 | BUS B opened, CB3 breaker failure logic successfully executed. |
| | CB6 Failure | | Opening CB5 | BUS B opened, CB6 breaker failure logic successfully executed. |
| | CB9 Failure | | Opening CB8 | BUS B opened, CB9 breaker failure logic successfully executed. |
| **Fault on Line 1** | CB1 Failure | **Fig 1.9** | Opening CB4, CB7 | Line 1 opened, CB1 breaker failure logic successfully executed. |
| | CB2 Failure | **Fig 1.8** | Opening CB3 | Line 1 opened, CB2 breaker failure logic successfully executed. |
| **Fault on Line 2** | CB2 Failure | **Fig 1.8** | Opening CB1 | Line 2 opened, CB2 breaker failure logic successfully executed. |
| | CB3 Failure | **Fig 1.9** | Opening CB6, CB9 | Line 2 opened, CB3 breaker failure logic successfully executed. |
| **Fault on Line 3** | CB4 Failure | **Fig 1.9** | Opening CB9, CB7 | Line 3 opened, CB4 breaker failure logic successfully executed. |
| | CB5 Failure | **Fig 1.8** | Opening CB6 | Line 3 opened, CB5 breaker failure logic successfully executed. |
| **Fault on Line 4** | CB5 Failure | **Fig 1.8** | Opening CB4 | Line 4 opened, CB5 breaker failure logic successfully executed. |

| | | | | |
|---|---|---|---|---|
| | CB6 Failure | **Fig 1.9** | Opening CB3, CB9 | Line 4 opened, CB6 breaker failure logic successfully executed. |
| **Fault on Line 5** | CB7 Failure | **Fig 1.9** | Opening CB1, CB4 | Line 5 opened, CB7 breaker failure logic successfully executed. |
| | CB8 Failure | **Fig 1.8** | Opening CB9 | Line 5 opened, CB8 breaker failure logic successfully executed. |
| **Fault on Line 6** | CB8 Failure | **Fig 1.8** | Opening CB7 | Line 6 opened, CB8 breaker failure logic successfully executed. |
| | CB9 Failure | **Fig 1.9** | Opening CB3, CB6 | Line 6 opened, CB9 breaker failure logic successfully executed. |

## 1.3 Conclusion

In modern control centers, system operators get alarm messages from many devices in real time. From alarms, it is still very hard to find out location and type of the potential equipment problem. One needs an automatic way of processing the events to identify whether sequences of equipment operation were regular. Instead of many alarm messages, only one report should be sent to the operators with concise information about success or failure of a sequence. In the case of a breaker, report will offer more detailed message whether the breaker failure logic worked out properly and finally disconnected faulted section. This kind of analysis enables tracking of every CB operation allowing reconstruction of an entire sequence of operations.

# 2. Software Requirements Specification

## 2.1 System Architecture

The Fig 2.1 displays the system architecture identified at this stage. Both hardware and software elements are outlined.

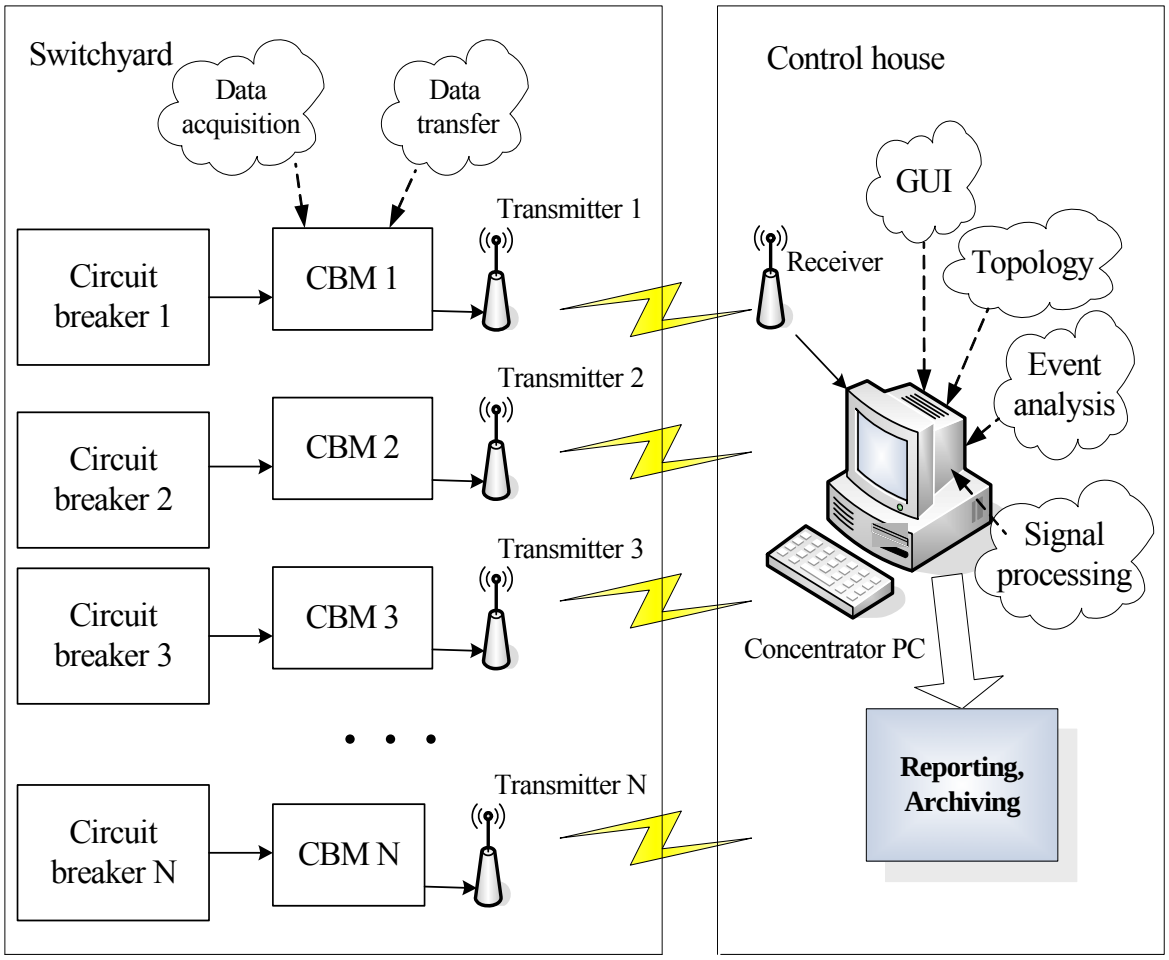


Fig. 2.1: System architecture (Substation level)

The main elements of the shown architecture are briefly described below for easier understanding of the subsequent sections:

- *CBM* (Circuit Breaker Monitor) is device with two main functionalities:
  1. Data Acquisition – This module is responsible for acquiring the event data (analog and digital circuit breaker signals) using a suitable data acquisition board.
  2. Data Transfer – This module is responsible for transfer of event data from the remote processor to the concentrator PC. This transfer is carried out using a wireless link.
- *Signal Processing* – This module is responsible for processing the collected event data. The result of the processing is the list of the pertinent signal parameters.

- *Event Analysis* – This module is responsible for analyzing the event data. The analysis is carried out by an expert system. The set of rules (knowledge base) is stored at the concentrator PC. There are two different sets of rules. First one analyzes files collected from each breaker separately, and second one makes conclusions according to behavior of a group of CBs operating in a sequence.
- *Reporting, Archiving* – This module is responsible for:

  a) Creating and disseminating the event reports to different system users

  b) Archiving the event data and reports
- *GUI* – This module is responsible for providing convenient means of configuring the system according to different needs.
- *Topology*- Program should work on selected power system topologies imported from the configuration file (in XML format). The configuration file is generated by separate application in which user is able to connect components that describe power system topology visually.

In this phase the application is located at a substation, but it will be developed so that it can be used at a central location (Fig 2.2) as well. From the central location, application should be able to collect and process data from all substations. GUI will provide flexible ways of configuring the location of each analysis application (substation or system level).

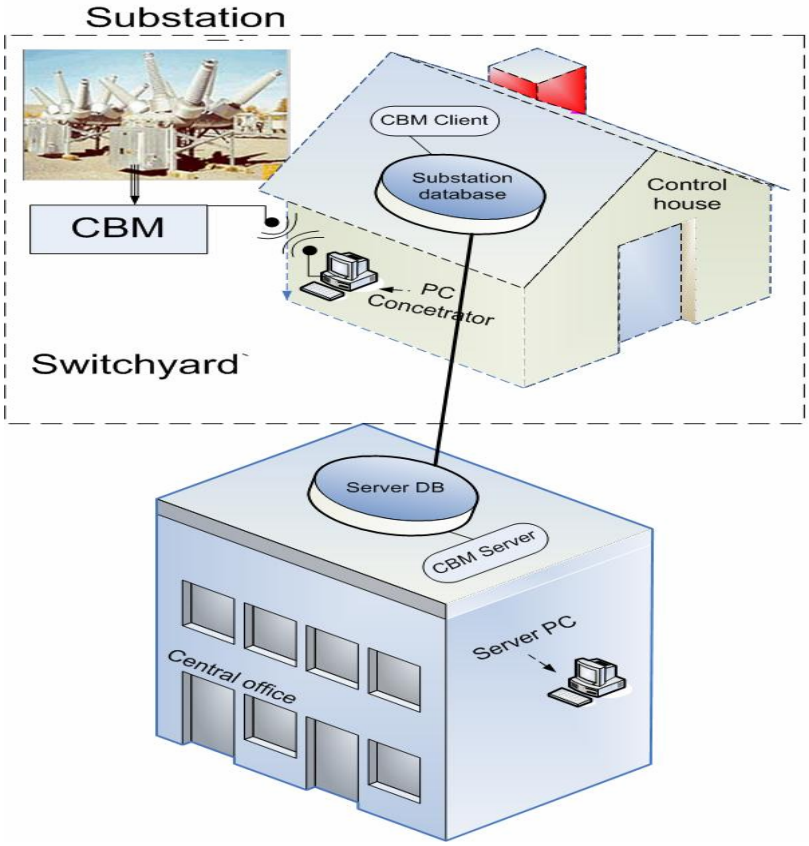


Fig. 2.2: System Architecture (System level)

### 2.1.1 GPS synchronization and time stamping

The signals from circuit breakers are collected from CBM units that are distributed at each breaker in the substation switchyard. Since signals from these distributed sources are analyzed together, they must refer to a common time. The different CBM units must have local clocks that are synchronized to within a given precision. Such a synchronization of the CBM units is to be achieved with a known time distribution system. In this application, the global positioning system (GPS) of satellites is used for synchronization. One pulse per second signal generated by a GPS receiver located in the control house of a substation is distributed to all CBM units in the substation. Time accuracy is better than 20 $\mu s$ [4]. In order to have adequate synchronization, the time accuracy must be less than half of sampling interval. Therefore, the maximum sampling rate, which we can achieve with this synchronization, is 416 samples/cycle. The sampling rate used in the CBM device is 96 samples/cycle. This limitation of sample rate is caused by hardware implementation and speed of data transfer, and it meets the requirements.

CBM device samples all input signals at the same time and assigns a time stamp to each sample. This way all events can be positioned precisely on a time line, even if they come from different units. If the other IEDs (SCADA RTU, DFR …etc) use GPS for synchronization, it is possible to compare events from different devices.

Automated analysis of recordings collected during operation of a group of circuit breakers is performed by comparing time stamps of events. Sampling synchronization is controlled by a signal coming from GPS receiver, which enables that all signals are sampled at the same time instant. This provides temporal relation among different signals. In addition, the spatial correlation can be tracked easier as well [5].

### 2.1.2 Phasor Measurement Enabled IEDs

A Phasor Measurement Unit (PMU) is used to sample voltages. Reference time signals from the GPS satellites are used for synchronization of sampling. Fig 2.3 shows an example of applications with PMU that is implemented using a modern protection terminal [6].

Phasor representations of voltage magnitudes and angles at key locations throughout the power system define the state of the network. Capable of recording long duration electrical disturbances in the phasor format and providing continuous sampling in support of real time applications, the GPS- enabled IEDs add a new dimension to power system monitoring.

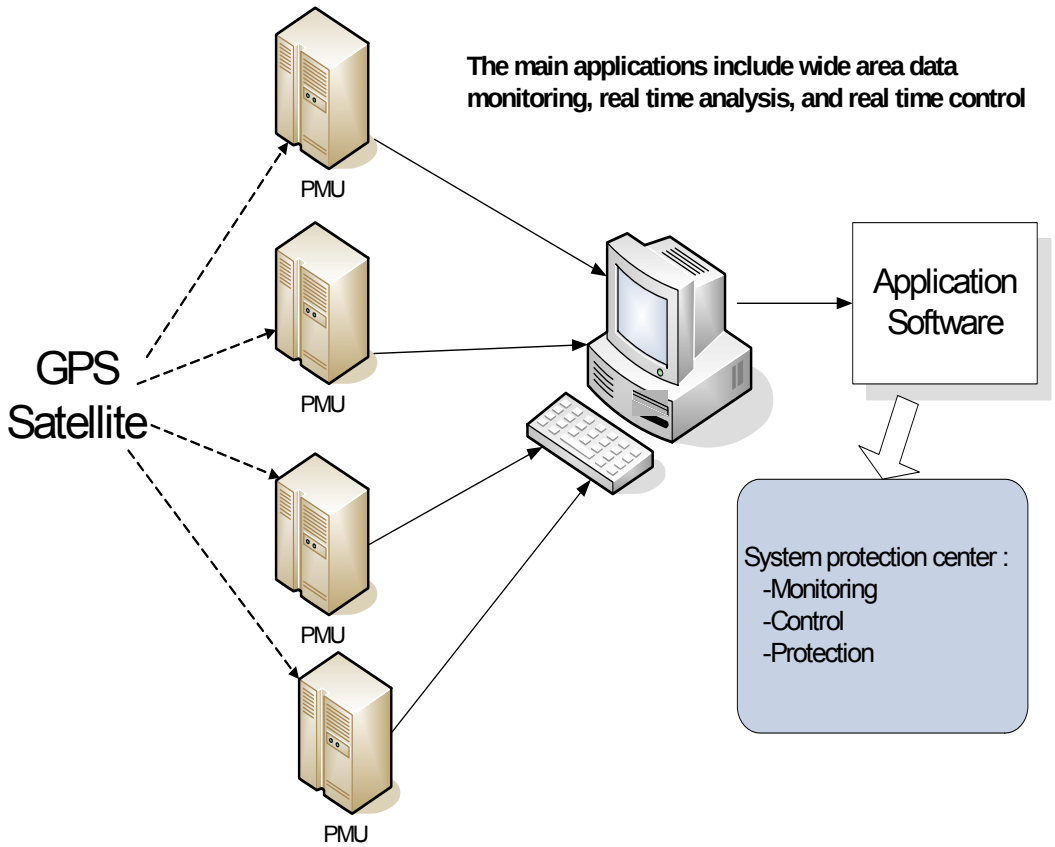


Fig. 2.3: Placement of PMUs in WAMS

CBM devices are capable of recording status signals while GPS-enabled IEDs are capable of tracking analog signals with GPS precision. Combining the two systems one can get tracking of both status and analog signals with GPS precision.

## 2.2 Application Software

As explained above, the application layer of the software architecture consists of the following software modules:

- Signal Processing analysis
- Expert System analysis

### 2.2.1 Signal Processing Analysis

The signal-processing module executes the following functions:

- Retrieving the raw event data from the breaker location via the wireless link. The event data will arrive as a set of COMTRADE files
- Processing the event data in order to extract the pertinent signal parameters
- Extracting the calculated parameters in the form of an ASCII file. These parameters are used in the expert system analysis and they are internal parameters of the program.

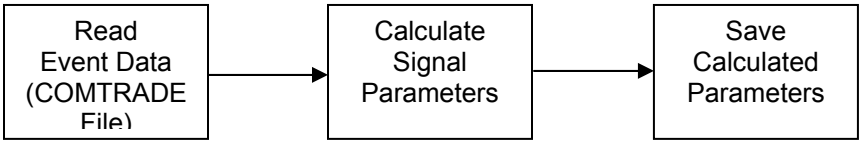


Fig. 2.4: Signal Processing Module

### 2.2.2 Expert System Analysis

The expert system analysis module executes the following functions:

- Interfacing the expert system to a file that can be recognized by the expert system and invoking the expert system
- Generating and preparing a comprehensive event report using the general event information and the basic expert system report

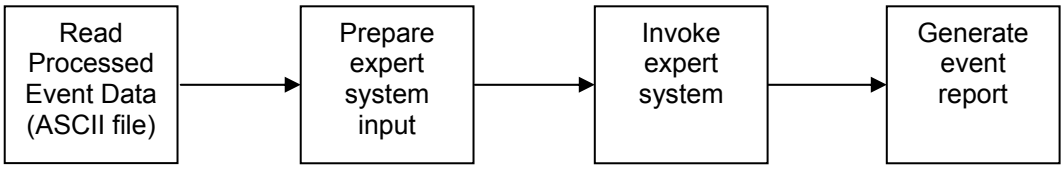


Fig. 2.5: Event Analysis Module

### 2.2.3 Expert System

As indicated earlier, software classification of events will be carried out by an expert system. The expert system will be implemented using CLIPS expert system shell [7].

The expert system is invoked directly from the Expert System Analysis module. This is accomplished by using set of function calls. A dynamically linked library (DLL) provides the integration of CLIPS. This library is publicly available from the CLIPS Web site [8].

There are two sets of expert system rules and each set is maintained as a single file (ASCII format). The Signal Processing module generates the set of the facts that the first set of rules operates on. The expert system rules for analyzing behavior of several circuit breakers are in the development phase at this moment and they will be discussed in detail in the future. The first set of rules of expert system module will generate the set of facts that the second set of rules operates on. Expert system structure is shown on Fig 2.6.

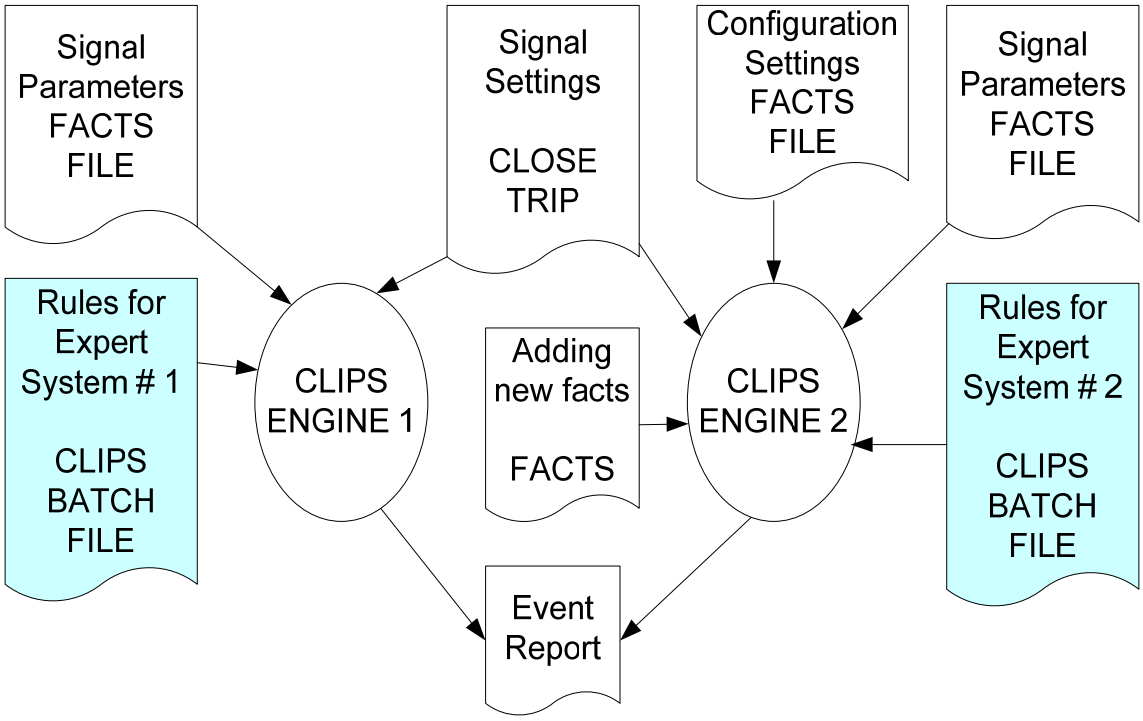


Fig. 2.6: Expert system structure

- CLIPS Engine – is an interactive environment for executing CLIPS rules and rule batch files.
- Rules File for Expert System #1– contains problem-specific knowledge base. This file is written in the form of a CLIPS batch file. Those rules analyze files received from each breaker separately.
- Rules File for Expert System #2– contains problem-specific knowledge base. This file is written in the form of a CLIPS batch file. Those rules analyze behavior of

group of circuit breakers and provide conclusions about momentary status of selected switching elements in a substation.

- Signal Parameters – contain signal parameters extracted by signal processing module.
- Signal Settings File – contains normal settings and tolerances for all signal parameters. Individual files exist for trip and close operation.
- Event Report File – contains text messages printed by the expert system. The messages report on all the rules that have "fired".

#### 2.2.3.1 Expert System Rules

The expert system rules are defined in the Design Specification document. Each rule has two parts: an antecedent part and a consequent part. Rules File for Expert System #1, related to the analysis of each file received from individual circuit breaker, is developed and tested in earlier projects [9]. This part of analysis determines status of a single CB. Those rules will not be discussed in this document. Since systems capable of performing automated analysis of signals collected from a group of breakers according to power system topology are new and have not been used in practice so far, the idea and approach will be discussed in this section.

There are two aspects of the analysis that should be merged, temporal and spatial aspect [10]. Controlling sampling synchronization with a GPS time reference signal provides temporal relationship among different signals of different circuit breakers. The configuration file of the equipment architecture provides spatial correlation between substation elements.

#### 2.2.3.2 Configuration file facts

The number of circuits that are connected to a bus varies widely. There are many arrangements in service dictated by the economics and flexibility of system operation [3]. In this section, configuration file for a four-circuit breaker-and-a-half bus as shown in Figure 2.7 arrangement will be analyzed, but similar approach can be used on any other arrangement. Each breaker in configuration file will be described as:

CB (ID, left Connection, left Breaker, right Connection, right Breaker)

Left and right breakers represent neighboring breakers. Left (right) connection represents a transmission line or bus that is connected or disconnected by opening the target breaker on both sides. For example for the topology shown on Fig. 2.7, each breaker will be described in Table 2.1:

Table 2.1: DESCRIPTION OF SUBSTATION CONFIGURATION

| ID | Left connection | Left breaker | Right connection | Right breaker |
|---|---|---|---|---|
| CB1 | Bus A | None | L1 | CB3 |
| CB2 | Bus A | None | L3 | CB4 |
| CB3 | L1 | CB1 | L2 | CB5 |
| CB4 | L3 | CB2 | L4 | CB6 |
| CB5 | L2 | CB3 | Bus B | None |
| CB6 | L4 | CB4 | Bus B | None |

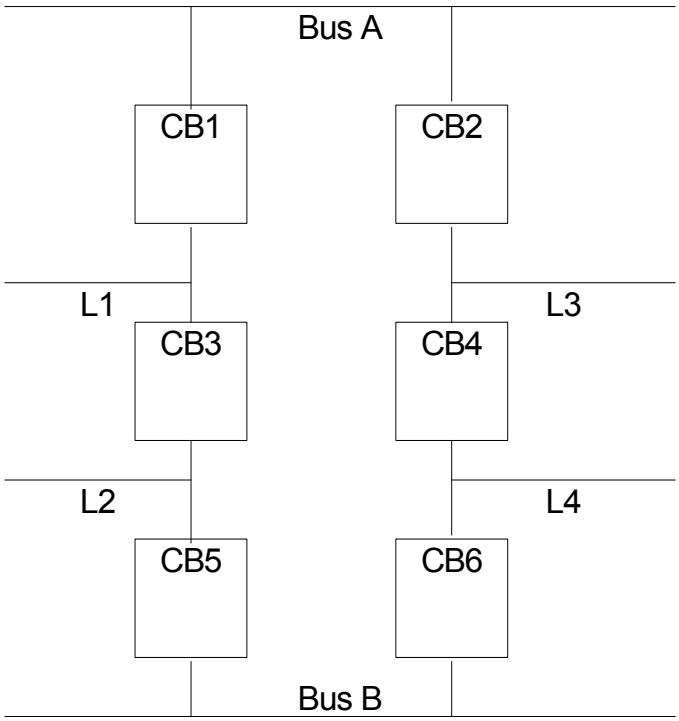

Fig. 2.7: Typical four-circuit breaker-and-a-half bus

Whenever there is a new file from one of the breakers, it will be processed, event will be shown on the time line and new facts about operation of specific breaker will be asserted. Which combination of breaker operations will fire the rules depends of topology, which

is described in a configuration file. Physical configuration file of the equipment architecture will be converted into Config.dat file as shown on Fig 2.8:

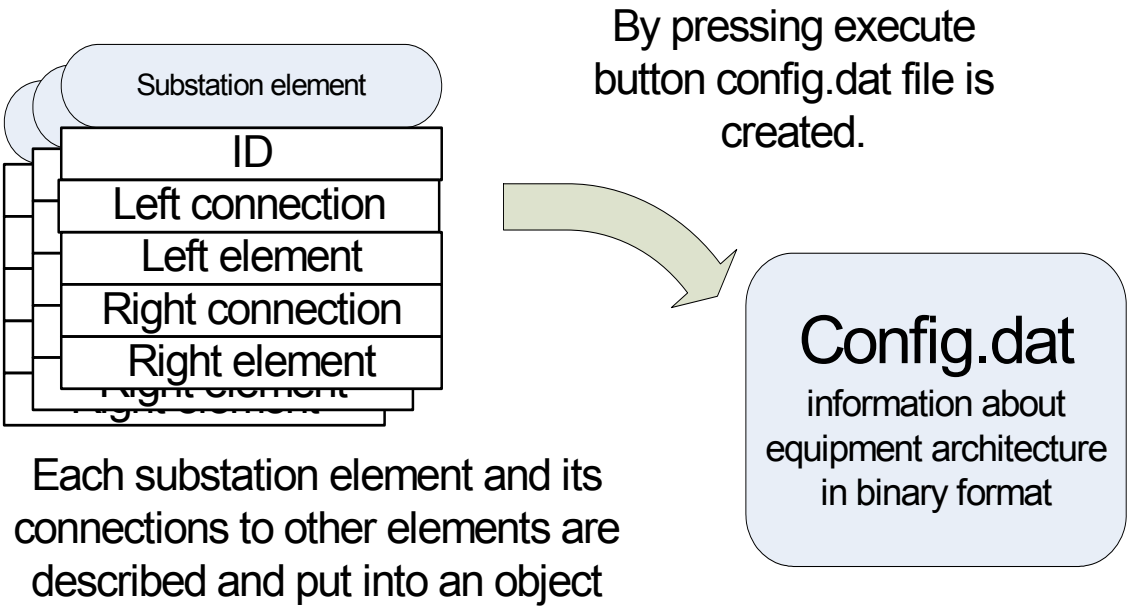


Fig. 2.8: Generating physical configuration file of the equipment architecture

From the configuration file, application generates facts used by expert system to analyze behavior of a group of circuit breakers. For example by checking status of all elements that are directly connected to BUSA, we know whether BUSA is connected or disconnected. Facts about connectivity of elements are taken from Config.dat, which represents configuration file of the equipment architecture. At this phase of development, physical configuration file is in binary format, but it is possible to change, so that it is serialized into XML format if needed. Here, we use the term "serialization" to mean a reversible reconstruction of an arbitrary set of data structures to a sequence of bytes in binary or XML format. Such a system can be used to reconstruct an equivalent structure in another program context. In our case, separate application Topology builder provides us with the means to connect components that describe power system topology visually. Once we draw one line diagram, which is presented as a data structure, we can decompose that data structure into a sequence of bytes in binary or XML format. This process of decomposing is called serialization and output of this process is serialized file. Later when we want to import different topologies into our main application, data structure that represents topology of our substation is reconstructed out of corresponding serialized file. This provides that created object, decomposed into serialized file, is reusable even when application that generated that object is not running. Generated file is portable and it enables us to use one-line diagram constructed for one application for describing the same configuration in different locations for different applications.

### 2.2.4 Designation of the user type

Different users have different interest regarding sequences of breaker operations and topology status. For some of them it is important to know precise topology of the system and status of CBs in every moment and for some of them it is important to know precise sequence of operations of a group of CBs after fault was recognized. It is important to distinguish between manual and automatic operation on a circuit breaker. Usually manual operation can be executed by maintenance personnel, from control house or at the breaker, or by an operator through SCADA. In the case that maintenance personnel performs manual operation it usually informs operator in advance before taking the action. If there is a manual operation and operator did not expect it, it is possible that there is unexpected intrusion into the substation or failure of equipment, which should raise alarms and appropriate security protection. The application being developed in this project will enable creation of different reports for different users, which is described in Table 2.2.

Table 2.2: DESIGNATION OF USER TYPES

| **User type** | **Application output** |
|---|---|
| Operations | - Status of a and b contacts for each CB in the observed area<br>- Current topology - conclusions about current topology are maid by expert system, which analyzes which CBs are opened or closed and concludes whether corresponding elements (lines, buses…) are connected or disconnected from the rest of the power network.<br>- Marking events that were initialized manually and providing maintenance report about manual operation |
| Maintenance | - Precise sequence of operations on a time line<br>- Automatic and manual analysis of sequence of operations and conclusions about problematic sequences<br>- Automatic and manual analysis of operation of each breaker individually<br>- Marking events that were initialized manually and allowing user to enter comments about manually initialized operation |
| Planning | - Archiving signal parameters and event reports that could be used to make decisions about efficiency of a group of different breakers that work synchronously |
| Protection | - Report describing sequence of operations of a group of CBs after fault was recognized including the precise timing of protection.<br>- Presenting graphically sequence of operations on a time line according to fault event that user chooses. |

### 2.2.5 Graphical User Interface

GUI will show power system topology and its elements monitored by other modules of the software. GUI will display status of all circuit breakers after the last event.

The way the users communicate with the application should be through a GUI that allows users to view the bus configuration at the substation level (application could be extended to overall power system level application in future). The users should be able to launch different functions using the GUI menu items, such as TimeLine View, Analysis of a single event, Analysis of a sequence, etc. All those functions should run in real-time mode, while user is able to launch view of the specific analysis of interest. Client Application Architecture is shown on Fig 2.9.

After receiving new Comtrade files, application will process them and display status of breakers visually. GUI will inform users about status in a specific report. Format of the report depends on the user. After processing each event, reports and calculated parameters will be archived into database. This will enable user to see status of all breakers in the past, through simply selecting date and time of event in GUI environment.

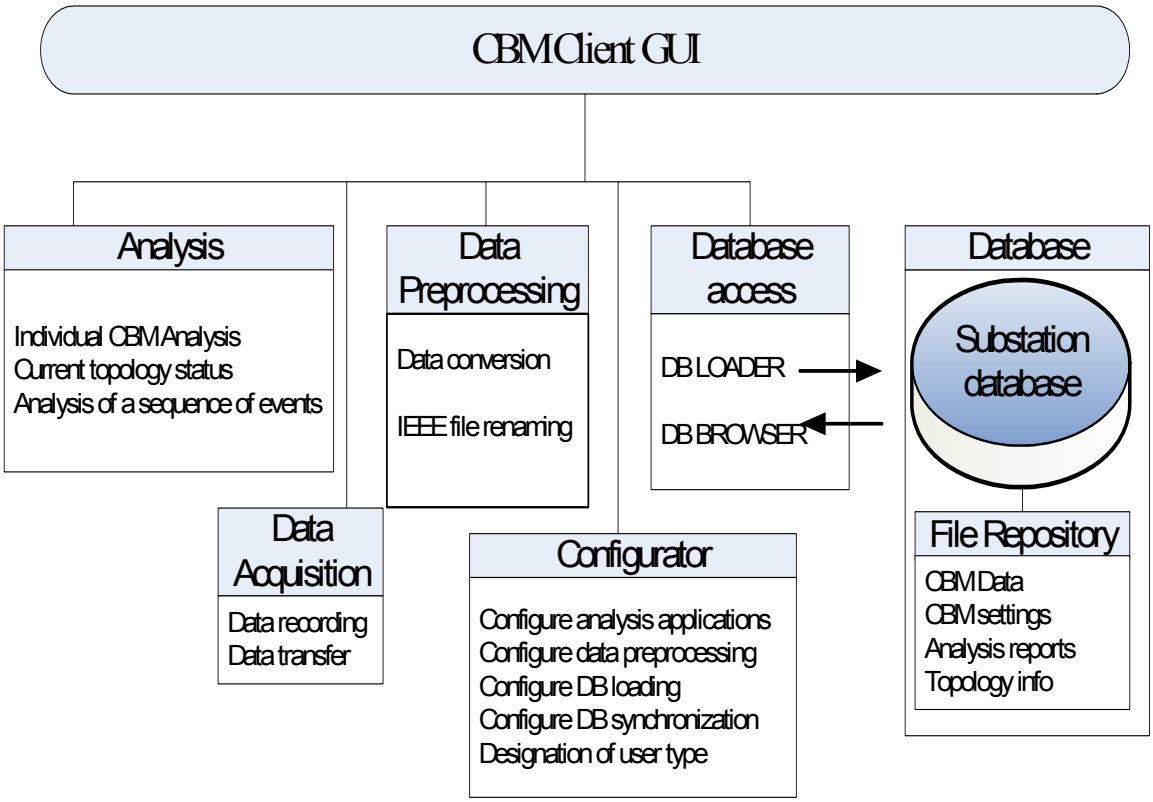


Fig. 2.9: Client application architecture

### 2.2.6 Reporting and archiving

Reports are generated by the expert system module and they are written in ASCII format. Reports contain results of individual CBM event analysis and analysis of a sequence of events. Each analysis creates different report. More detailed information regarding content will be discussed in the future during creating of the second set of rules for the expert system. At substation level, file repository will have limited capacity and reports will be transferred to the central office during off peak hours, where they will be processed further. Reports that should be sent immediately after processing will be communicated to the central office automatically by CBM server application.

Entity/Relationship (E/R) diagram enables us to present database model (kinds of data used in database and how they are connected). E/R diagram of database for this application is shown on Fig 2.10. Application will be able to communicate with database and provide different criteria for searching event characteristics such as time of event, device ID, substation ID, device type, type of analysis, combinations of multiple criteria, etc.

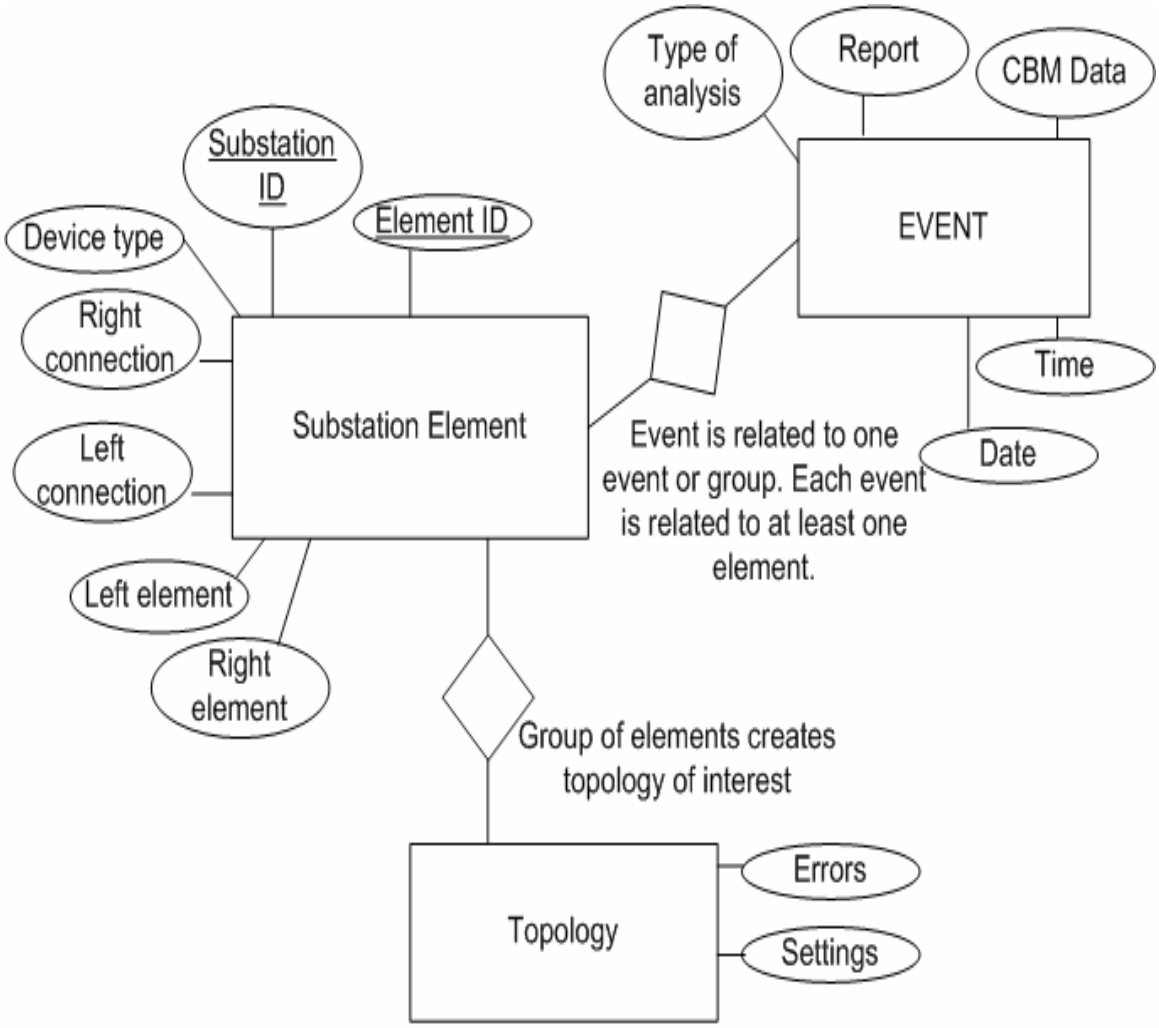


Fig. 2.10: E/R diagram of database

### 2.2.7 Formats for Input/Output files

The Fig 2.11 shows how the input and output files connect all functions. The meanings of I/O files mentioned in the figure are explained in the rest of this section. Detailed formats of some of these files will need to be modified further.

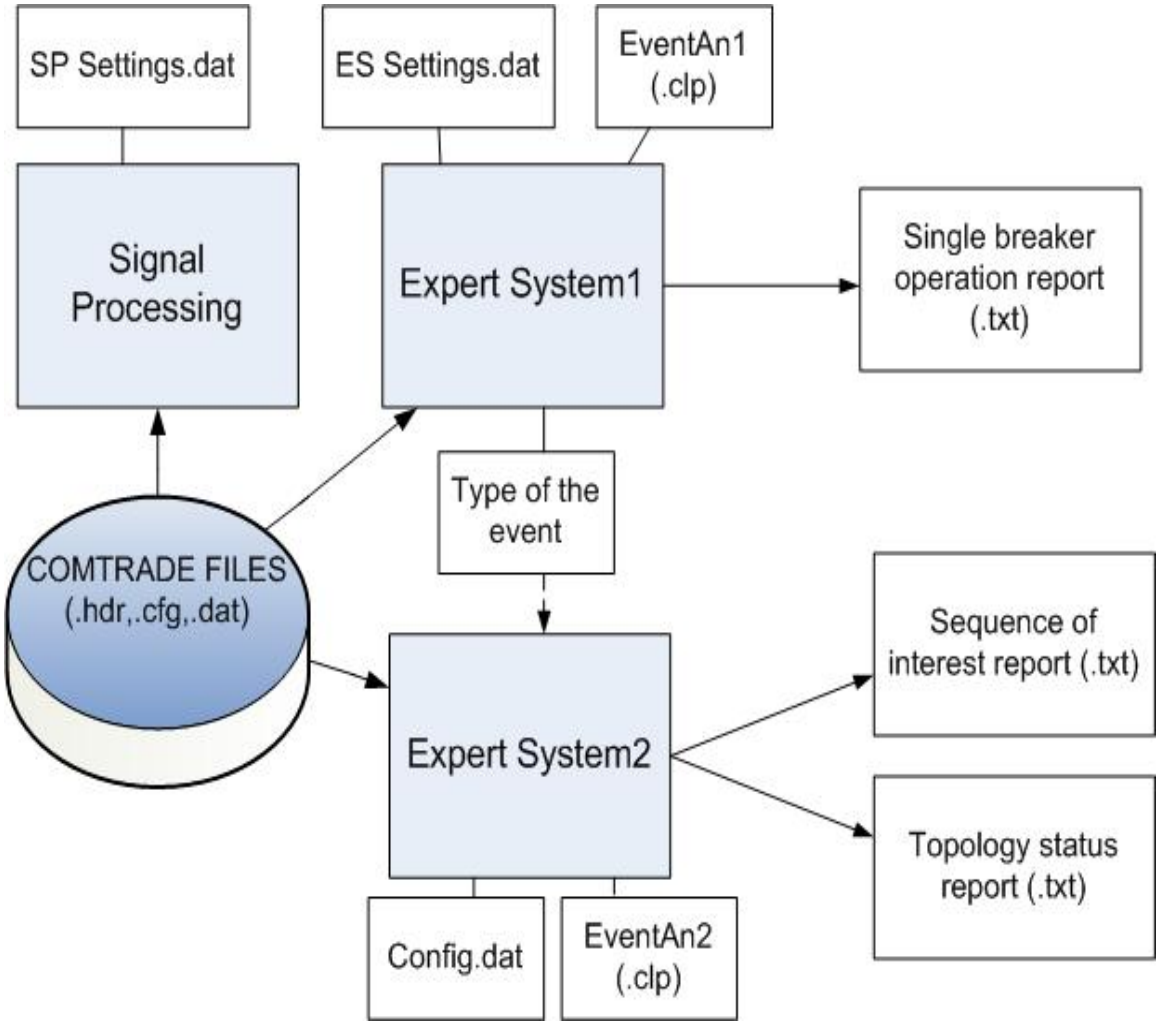


Fig. 2.11: Input / output files

Input files:

- COMTRADE files (.hdr, .cfg, .dat) are generated by CBM device according to the IEEE COMTRADE format (1991 or 1999). CBM device should be capable to generate also the IEC version of COMTRADE files in the future and application will be adapted to manipulate those files. Signal processing module contains a COMTRADE conversion tool that takes COMTRADE files and converts them to a form that program can use. As the conversion tool reads the file, it looks for keywords that indicate the channels that need to be stored for processing. Table 2.3 lists all the signals and corresponding keywords in the COMTRADE file:

Table 2.3: KEYWORDS INSIDE COMTRADE CONFIGURATION FILE

| Signal Name | Keyword in CFG file |
|---|---|
| Control DC | Supply DC |
| Yard DC | Yard DC |
| a Contact | Bkr close –A |
| b Contact | Bkr open –B |
| Trip Current 1 | Trip Current 1 |
| Trip Current 2 | Trip Current 2 |
| Close Current | Close Current |
| Trip Initiate | Trip Event |
| Close Initiate | Close Event |
| X Coil | X Coil |
| Y Coil | Y Coil |
| Phase A Current | A Phase Current |
| Phase B Current | B Phase Current |
| Phase C Current | C Phase Current |

- SPSettings.dat - Settings are created to customize signal processing for different types of breakers. These settings determine tolerance characteristics of signals collected from control circuit for different types of breakers. They are used in Signal Processing Module.
- ESSettings.dat - Settings are created to customize expert system processing and analysis for different types of breakers. These settings determine tolerance values for different types of breakers. They are used in Expert System Module.
- EventAn1.clp- presents Rules for Expert System #1, which analyze a single event
- EventAn2.clp- presents Rules for Expert System #2, which analyze multiple events consisting of operations of single or group of breakers.
- Config.dat- describes how elements are connected in the observed area. At this moment, this file is a serialized object in binary format as explained in Section 2.5.1.

Output files:

Reports are in an ASCII text file format containing results of event detection, classification and waveform characterization.

- Report from individual CBM event analysis: gives detailed information when the event happened and on which breaker. This report shows detailed description of all abnormalities encountered during analysis and gives final conclusion about the event, showing whether breaker is opened or closed. This report contains Maintenance and Repair information in case any abnormalities in the waveforms are noticed.

- Analysis of a sequence of events: gives information about cause and consequence of a sequence of events. For example:

  Cause Consequence

  Fault on Line1 → opening of a group of breakers (CB1-OPENS, CB2…)

  CB2 did not open → breaker failure logic is fired (CB3-OPENS…)

  This report contains maintenance information in the case some events are delayed.

- Waveform characterization: it is possible to extract values of one or more signal features from chosen events into report. This report could be used for improving tolerance settings that characterize different circuit breakers.

A report that will discuss rules for the second expert system module will be prepared in the future.

### 2.2.8 Conclusion

The precise measurements in the network in real time provide opportunity for an assessment of what is happening in the network. Very often the networks reach a state that is unexpected. Add to this the fact that protection systems may misoperate or develop hidden failures. This application deals with the problem of identifying the state of the substation elements at any given time. Automated analysis of multiple events initiating a single breaker operation or operation of a group of breakers is used for determining the configuration of the observed area at any time. Knowing system topology at any time enables precise tracking of the faults and sequences in an easy way

# 3. Software Test Plan

## 3.1 Data Requirements

In order to test correctly the CB Monitoring application, it is necessary to acquire a sufficient number of circuit breaker records. The signal processing module and the first expert system are already completely developed and tested [9]. For the remaining expert system module that should be tested, at least one set of test records needs to be provided for each rule specified in the Expert System Rule definitions. For each rule that should be tested, appropriate sequence of event files from different circuit breakers should be prepared.

Each of the records should contain all the signals that are currently monitored in the opening and closing operations. The signals monitored in an opening operation include Control DC, Yard DC, a Contact, b Contact, Trip Coil Current, Trip Initiate, Phase A, Phase B, and Phase C. The signals monitored in a close operation include Control DC, Yard DC, a Contact, b Contact, Close Coil Current, Close Initiate, X Coil, Y Coil, Phase A, Phase B, and Phase C. Additional requirements for the test data include the following:

- Each record needs to contain data in the IEEE COMTRADE format (binary or ASCII) according to the standard.
- The manufacturer name, breaker type, trip time, and a description of any signal abnormalities in the record needs to be provided for each record.
- Records should be copied into input folder according to sequence of events that we are testing

Since one CBM device is installed in the field, records of opening and reclosing sequences from one CB already exist. Next step is to change the time stamp from a header file and name of a breaker in order to create proper test cases. For example, if we already have record of opening event for CBM1, simply by changing the name of CBM1 in the header file as shown on Fig 3.1 we obtained a record of an opening event for CBM2 breaker. In the case of a breaker and a half bus arrangement shown on Fig 1.3 by coping the opening event records from each breaker to appropriate folder, application should generate report that there was fault on LINE 1 and that breakers reacted successfully. The state of breakers on the diagram should change from closed to open.

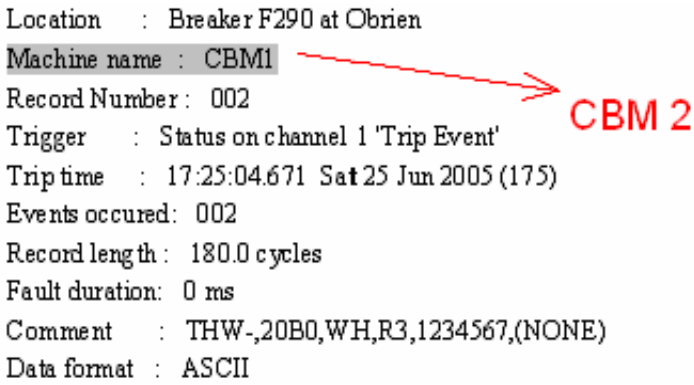


Fig. 3.1: Breaker CBM1 .HDR file

Above procedure could be executed automatically by a Test program. It would enable user to enter data about breakers from which events are coming and timings of events. According to entered parameters, corresponding COMTRADE files are created and Test program copies generated files into an input folder of the application according to the timing that the user sets. This would enable user to prepare hundreds of test cases, run simulation and check behavior of an application.

## 3.2 Data Classification

This section has been developed to facilitate the process of collecting and classifying signal records that will be used to test the analysis software. When testing the software, one has to have enough test cases that are already classified by the operators. These cases are then submitted to the automated analysis software and the results are compared with the results already established by the operators. The test cases with the results already known are called "reference cases". The process of testing the software using reference cases will be designated as "software calibration". This document indicates that the reference cases should be provided for at least three classes:

- The set of recordings is valid and represents a normal operation of the circuit breaker
- The set of recording is valid and represents an abnormal operation of a group of circuit breakers.
- The recording of the event is not valid

Each of the reference classes is further discussed in the subsections that follow. It is expected that this section will serve as guidance for collecting and classifying the records to be used for test and development purposes on this project.

### 3.2.1 Data Validation

There are some minimum requirements for a record to be useful for testing the signal processing and analysis software. In order to meet these basic requirements, it is up to the user to confirm that the record is valid. Validation involves a couple of simple and quick checks that can be performed on the record immediately after the data has been recorded. This includes a check if all the signals are present and to determine the time duration of the file.

It is important for the user to check that all of the required signals are in the record. If any of the signals are not present in the record, then the record is considered invalid. Table 3.1 lists the signals that must be present in the trip and close operations. If any of the signals are not present, then the system will not be able to make an accurate assessment of breaker's condition. The expert system has been implemented to perform these checks on a few of the critical signals such as the phase currents and close currents. It is left up to the operator to make sure that the remaining signals are present.

Table 3.1: REQUIRED SIGNALS

| Trip Sequence: | Close Sequence |
|---|---|
| Control DC | Control DC |
| b Contact | b Contact |
| Yard DC | Yard DC |
| a Contact | a Contact |
| Trip Current | Close Current |
| Trip Initiate | Close Initiate |
| | X Coil |
| | Y Coil |

### 3.2.2 Normal Circuit Breaker Operation

If a set of records does not contain any of the abnormalities defined by the expert system rules, then the record should be checked for other abnormalities that are not defined. If there are no other abnormalities, then the set of records is considered to correspond to a normal switching sequence. Sets of records coming from normal operations are valuable to the development of the Automated CB Monitoring application because they provide useful information regarding reference sequences.

### 3.2.3 Abnormal Circuit Breaker Operation

After it is established that the acquired set of records is valid, application is ready to process it. The best way to determine the type of the fault that causes switching sequence is to compare the signals with the same trip time against the rules defined for the expert system module. If a set of records contains any of the abnormalities described in the rules, then the sequence should be classified as abnormal. Some examples will now be given to guide the reader into making an appropriate decision.

Example 1: After getting two records with the same trip time, we will expect that there is a fault on one of the lines. In the case that one of the breakers was unsuccessfully opened breaker failure logic should be activated in order to disconnect faulted line. After breaker failure logic finally reacts and disconnects the faulted line, the sequence is over. Operator will get concise report about location of fault and abnormalities that appeared during opening (in this case failure of one breaker).

Example 2: Let us assume the case when only one breaker was opened. By comparing timing of events that come after opening, the application distinguishes automatic reclosing operation from manual operation. The application diagnoses that breaker was initialized manually and enables user in substation to enter reasons for manual operation and confirm manual operation. By enabling conformation button for manual operation substation user can easily inform operator that manual operation is executed as planed. In the case that manual operation is not planed nor confirmed, operator is informed that there is fault on a circuit breaker or unexpected intrusion.

### 3.2.4 Conclusion

Test records for testing circuit breaker switching sequence may fall into three distinct categories. The records that will be obtained in the future will be placed into these categories and used to calibrate automated circuit breaker monitoring system. The calibration will demonstrate the effectiveness of the system and it will indicate any changes or modifications that need to be made.

## 3.3 Test Plan

In this project, a test case is a set of records from circuit breakers that contains samples of all the signals that normally exist in an open or close operation. The record may contain normal or abnormal waveforms but the record must be valid. For a record to be considered valid, it has to contain all of the signals for the operation it represents and not contain any abnormalities that are due to a connection of the data acquisition unit. The test cases are the data used to ensure that all the expert system rules were formulated correctly. They also establish a reference by which the expert system settings can be formulated.

Two CBM devices installed in the field will allow us to collect files created during events on a corresponding breaker. It is expected that other CBM units will be installed in the same substation in the near future. All the records collected from these units will be copied sequentially, according to the time when they were created into the input folder of the application for the purpose of additional testing. Events on circuit breakers are not so frequent, so we have to think of other ways of generating test cases. Example of generating record from different circuit breaker is already presented in section 3.1. The most important thing is to create at least one set of test records for each rule specified. In the first phase, rules will be created and tests will be performed for the case of breaker-and-a-half bus arrangement. After successful running of test cases for this arrangement, analysis will be extended to other bus arrangements. Similar tests will be repeated.

Small incremental tests will be performed on the expert system throughout the entire development. These tests will be carried out after a rule or group of rules is implemented to verify that they work correctly. The main purpose is to reduce the number of syntax errors and bugs that are often introduced when writing the code. There are two types of tests that will be used to check the rule, a test to verify the rule does not fire when it is not supposed to fire and a test to verify that the rule fires when it is supposed to fire. The tests required the use of a file with artificial facts and file with artificial settings. They are artificial in the sense that the information contained in them reflects actual data from only one circuit breaker type, but the files are organized as if the data came from two different breakers. When these two tests produced positive results, the rule development continues. When the tests show that there is a problem with the rule(s), corrective actions will be taken and the tests will be performed again. These tests will continue until all of the rules had been implemented and tested.

The expert system tests will be performed after all the rules have been implemented and the settings have been created from the test cases. These tests are designed to check that the system accurately detects and classifies sequence abnormalities in the actual set of data acquired from circuit breakers. The test cases will be inserted into the expert system for

analysis one at a time. After the analysis of each set of records, the output will be checked against the corresponding input file to verify that the abnormality detected is indeed the abnormality in the record. Once a problem with the rules is discovered, corrective actions will be taken and the record will be tested again. The majority of problems that are discovered so far involve the settings adjustment. By tweaking the set values and tolerances, the system will be tuned to detect the abnormalities correctly.

The final application tests will be performed using Test program. This program is used to generate different sets of records related to an event. It will enable automatic simulation process, which enables one to check behavior of application when there are tens of events coming sequentially from different circuit breakers.

## REFERENCES


[1] Mladen Kezunovic, Predrag Teodorovic,“ Data Acquisition Unit”-Requirements and Specifications, CERTS Project Final Report for FY 03, Texas A&M University August 18, 2004

[2] Alstom T&D Energy automation and information, “ Network Protection & Automation Guide”, 1st edition, France: Cayfosa, July2002.

[3] J. L. Blackburn, *Protective Relaying: Principles and Applications*, 2nd edition, New York: Marcel Dekker, 1998.

[4] W. Lewandowski, J. Asoubib, W. J. Klepczynski, “GPS: primary tool for time transfer”, Proceedings of the IEEE, Vol. 87, No. 1. Jan. 1999, pp. 163-172.

[5] Mladen Kezunovic, Ali Abur, “Merging the Temporal and Spatial Aspects of Data and Information for Improved Power System Monitoring Applications”, Proceedings of the IEEE, Vol.93, No.11, November 2005

[6] J. Bertsch, C. Carnel, D. Karlsson, J. McDaniel, Khoi Vu, “Wide-Area Protection and Power System Utilization”, Proceedings of the IEEE, Vol.93, No.5, May 2005

[7] Joseph Giarratano, Gary Riley, “Expert System-Principles and programming”, Boston: PWS-KENT Pub. Co.1989.

[8] CLIPS-http://www.ghg.net/clips/CLIPS.html

[9] M. Kezunovic, Z. Ren, G. Latisko, D.R. Sevcik, J. Lucey, W. Cook, E. Koch, "Automated Monitoring and Analysis of Circuit Breaker Operation," *IEEE Transactions on Power Delivery,* Vol. 20, No. 3, pp 1910-1918, July 2005.

[10] Mladen Kezunovic, “Monitoring of Power System Topology in Real-Time”, *Hawaii Int’l Conference on System Sciences, HICCS-39*, Poipu, Kauai, January 2006

# APPENDIX

## A. Format of the Comment section in a randomly named HDR Comtrade file

Operator should manually enter data shown in Table A1 or Table A2 by using RIS DS 32 software. The data includes five or six fields, each separated by coma. No blank spaces are allowed at the beginning, at the end or inside any of the comment fields. Only the last field, user comment related to DFR, can be omitted. Comment fields and data contained are described in the Table A3. All the comment fields except the last one are mandatory. If any of these fields is omitted, application will report error and fail to process DFR records.

The Comment field should look like "THW-,20B0,WH,R3,1234567,Breaker close".

Table A1. Comment: THW-,20B0,WH,R3,1234567,Breaker close

| **Field value** | THW- | 20B0 | WH | R3 | 1234567 | Breaker close |
|---|---|---|---|---|---|---|
| **Field tag** | Station ID | Brkr ID | Mnfctr | Brkr Type | SAP ID | Real Comment |
| **Field index** | 1 | 2 | 3 | 4 | 5 | 6 |

Only the last Comment field with field index 6 is not mandatory. If this field is not used, there is no need for comma separator after SAP equipment identifier is entered. In that case, comment should look like " THW-,20B0,WH,R3 ,1234567".

Table A2. Comment: THW-,20B0,WH,R3,1234567

| **Field value** | THW- | 20B0 | WH | R3 | 1234567 | |
|---|---|---|---|---|---|---|
| **Field tag** | Station ID | Brkr ID | Mnfctr | Brkr Type | SAP ID | Real Comment |
| **Field index** | 1 | 2 | 3 | 4 | 5 | 6 |

Table A3: Format of the comment section in a randomly named HDR Comtrade file

| Field Index | Description | Field Data |
|---|---|---|
| 1 | xxxx (number of characters can be 1,2,3 or more) | Station identifier |
| 2 | xxxx (number of characters can be 1,2,3 or more) | Device Identifier |
| 3 | xxxx (number of characters can be 1,2,3 or more) | Breaker Manufacturer |
| 4 | Xxxx (number of characters can be 1,2,3 or more) | Breaker Type |
| 5 | Xxxxxxx (number of characters can be 1,2,3 or more) | SAP equipment identifier |
| 6 | Text | Comment |

# PART 3

# In Service Demonstration

## Table of Contents

1. Topology ..... 1
1.1 Demonstration of Topology builder application ..... 1
2. Analysis ..... 3
2.1 Demonstration of Sequence Analyzer application ..... 3
2.1.1 File Folder Structure ..... 3
2.1.2 Features of user interface and application ..... 4
2.1.3 Demonstration of analysis of sequence analysis ..... 7
3. Status of hardware ..... 11
4. Conclusion ..... 12
REFERENCES ..... 13

## Table of Figures

**Figure 1.1** Main window of Topology builder application ..... 1
**Figure 1.2** Choosing tools ..... 1
**Figure 1.3** Breaker and a half one-line diagram..... 2
**Figure 2.1** File folder structure ..... 3
**Figure 2.2** Importing topology to Sequence Analyzer application ..... 4
**Figure 2.3** Status of GUI after processing opening and closing event on CB3 ..... 5
**Figure 2.4** History dialog for CB3 ..... 6
**Figure 2.5** Example of maintenance report after closing event on CB3 ..... 6
**Figure 2.6** Example of sequence report after trip event on CB1 and CB2 ..... 7
**Figure 2.7** Example of sequence report after permanent fault is present on Fault 1 ..... 8
**Figure 2.8** Status of CBs before and after CB failure logic was fired ..... 9
**Figure 2.9** View of time-line and reports after CB1 failed to disconnect Line1..... 9
**Figure 2.10** Status of CBs before and after CB failure logic was fired ..... 10
**Figure 2.11** View of time-line and sequence report after CB2 failed to open Line 1..... 10
**Figure 3.1** CBM1 in substation filed..... 11
**Figure 3.2** CBM2 in substation field..... 11

# 1. Topology

## 1.1 Demonstration of Topology builder application

As mentioned in [1] the Sequence Analyzer software should work on selected power system topologies imported from the configuration file. The configuration file is generated by separate application in which user is able to connect components that describe power system topology visually. The Topology Builder software is developed for that purpose and it will be demonstrated in this section.

The main window is displayed in Fig 1.1. Main purpose of this application is to enable visual drawing of specific topology that will be used in the Sequence Analyzer software.

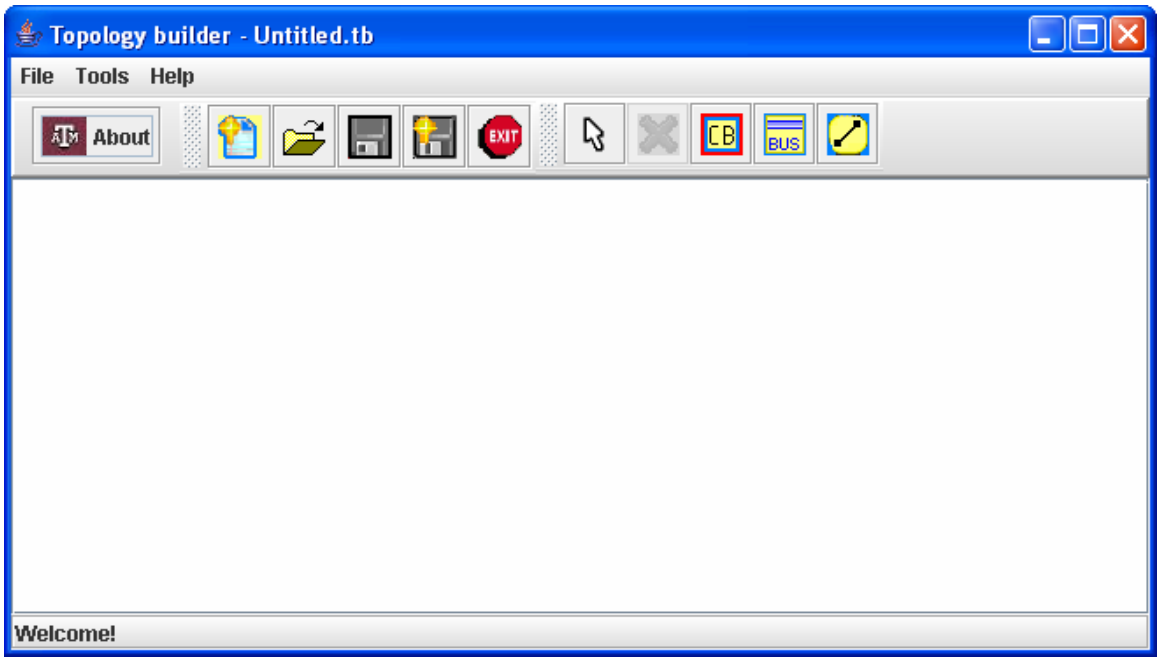


Fig. 1.1: Main window of Topology builder application

As shown in Fig 1.2, by selecting a tool either from menu bar item *Tool* or by clicking on corresponding Icon from the toolbar, user is able to draw, drag and move specific element to be shown on the topology one-line diagram.

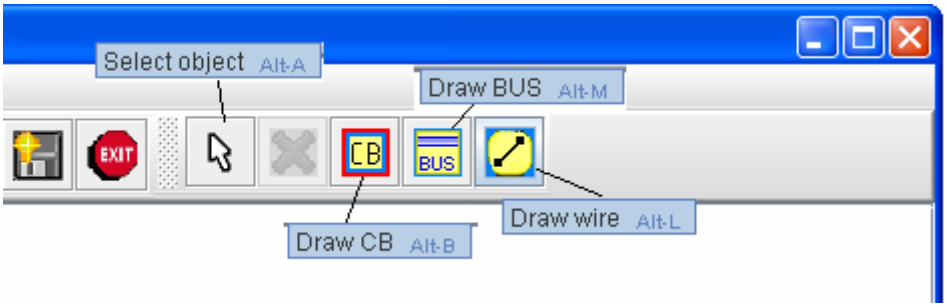


Fig. 1.2: Choosing tools

A breaker-and-a-half bus arrangement drawn using the Topology Builder is shown in Fig 1.3. This configuration will be used for demonstration of the Sequence Analyzer application. Each element has properties that could be set, like name for each element, status of circuit breaker (red-breaker is closed or green-breaker is opened). Names of circuit breaker are drawn with a different color. A chosen color determines color of the event traces that will be drawn on the time line included in the Sequence Analyzer application. This will be demonstrated in Section 2.

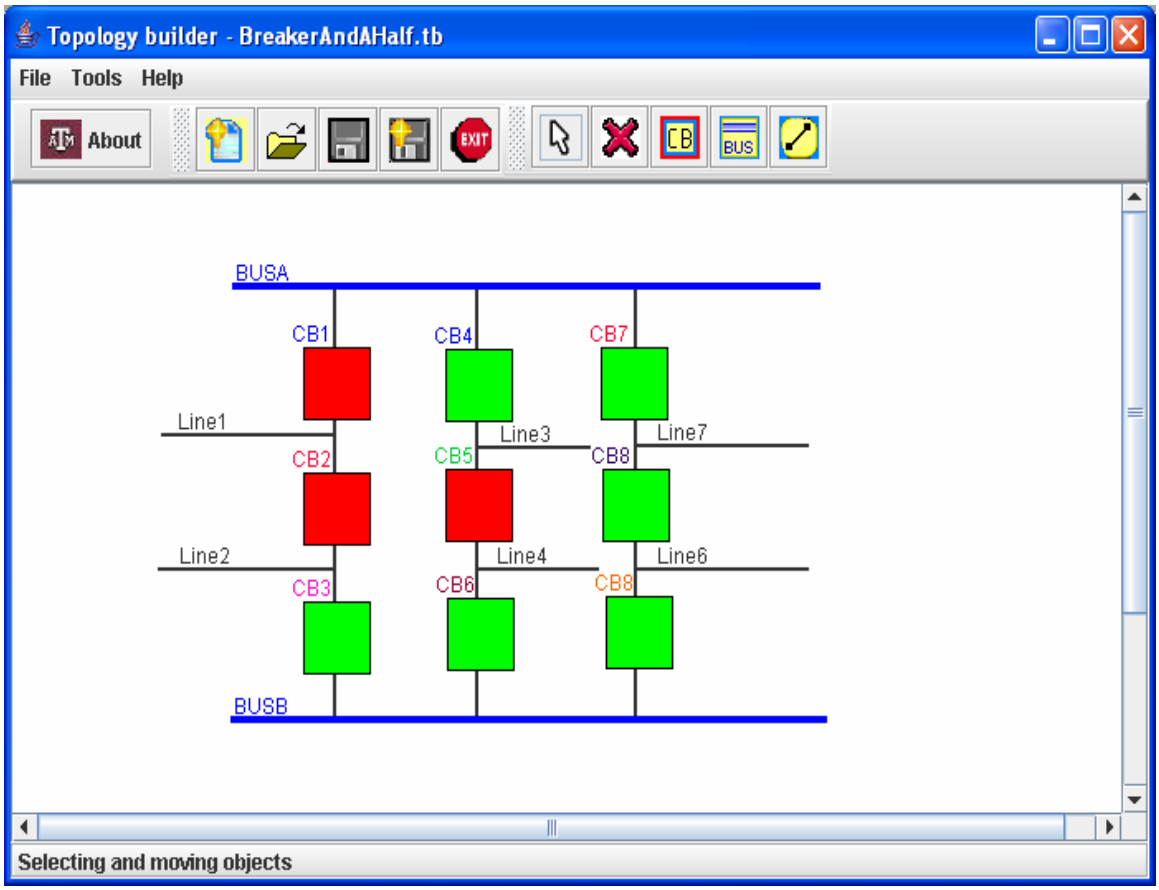

Fig. 1.3: Breaker and a half one-line diagram

Once we draw topology it can be saved in "*.tb" format simply by choosing "save" from File menu. Program will automatically serialize the one-line diagram as explained in [1]. By serializing approach, the drawn topology can be easily read and imported by Sequence Analyzer application.

# 2. Analysis

## 2.1 Demonstration of Sequence Analyzer application

Further demonstration will be presented for the bus arrangement from Fig 1.3. Section 2.1 summarizes structure of all the input/out file folders and file formats that are used in the Sequence Analyzer application. Section 2.2 describes features of the user interface and section 2.3 shows results from different test cases and corresponding reports that are generated.

### 2.1.1 File Folder Structure

Fig 2.1 shows an example of how file folders are organized in the Sequence Analyzer software. All files needed for running application files are kept under the root folder *CB Monitoring*. Five folders exist under *CB Monitoring: CB Analysis, CB Incoming, CB Results, CB Settings Data* and *RIS Outgoing*.

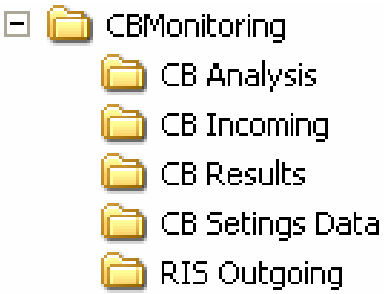


Fig. 2.1: File Folder Structure

All executable files are kept under the folder *CB Analysis*. All input/output files are stored under either *CB Incoming* or *RIS Outgoing*, based on whether the incoming files need to be renamed according to the IEEE standard [2]. *CB Incoming* folder collects renamed files and *RIS Outgoing* folder collects all COMTRADE files [3,4]. Application renames files from *RIS outgoing* folder and copies them into *CB Incoming* folder.

All additional libraries used by the application and reference example cases are kept in the folder *CB Settings Data*. Final reports are kept in *CB Results* folder. Final reports are in .txt format and they are renamed automatically according to the IEEE standard [2].

### 2.1.2 Features of user interface and application

The main window displayed after the user starts the Sequence Analyzer contains two empty panels. In order to run analysis it is necessary to determine topology of observed part of the network. By clicking on "import one-line diagram" button user can choose one of configurations drawn in the Topology Builder. Imported topology will be shown in down panel of main window as shown on Fig 2.2.

Figure 2.2: Importing topology to Sequence Analyzer application

Application is capable of working automatically. Whenever there are new COMTRADE files in RIS Outgoing folder application will start automatically processing new events. During this activity, progress bar in the right corner of main window will track progress of new event file data analysis. Once an event is processed it will be shown on the time line and status of corresponding breakers will be changed on the one-line diagram. Next page illustrates these changes, after new events from CB3 are processed.

Fig 2.3 shows status of GUI after processing trip event on CB3. Application changes status of CB3 from red to green showing that CB3 opened and showing precise time of event on time line. Next, one more subsequent event on CB3 has been received. This time it is close event on CB3. Application shows event on the time line and changes status of the breaker from green (opened) to red (closed).

Fig. 2.3: Status of GUI after processing opening and closing event on CB3

By clicking on any breaker from the one-line diagram new dialog will be opened showing history of events on the clicked breaker. Fig. 2.4 shows history dialog generated in our case where we had opening and closing event on CB3.

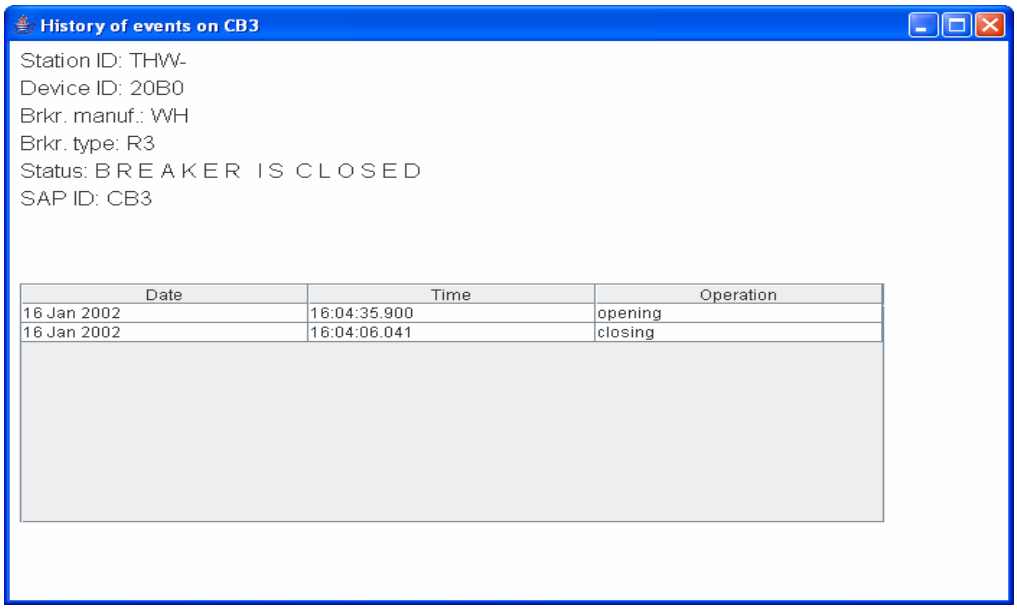


Fig. 2.4: History dialog for CB3

The program generates two kinds of reports: maintenance and sequence-of-operations report. Maintenance report contains analysis result of operation of each breaker individually. By clicking on any of the events shown on the time line corresponding report will pop up. Fig 2.5 shows one. Sequence-of-operation report brings conclusions about sequence of events, as it will be demonstrated in next section.

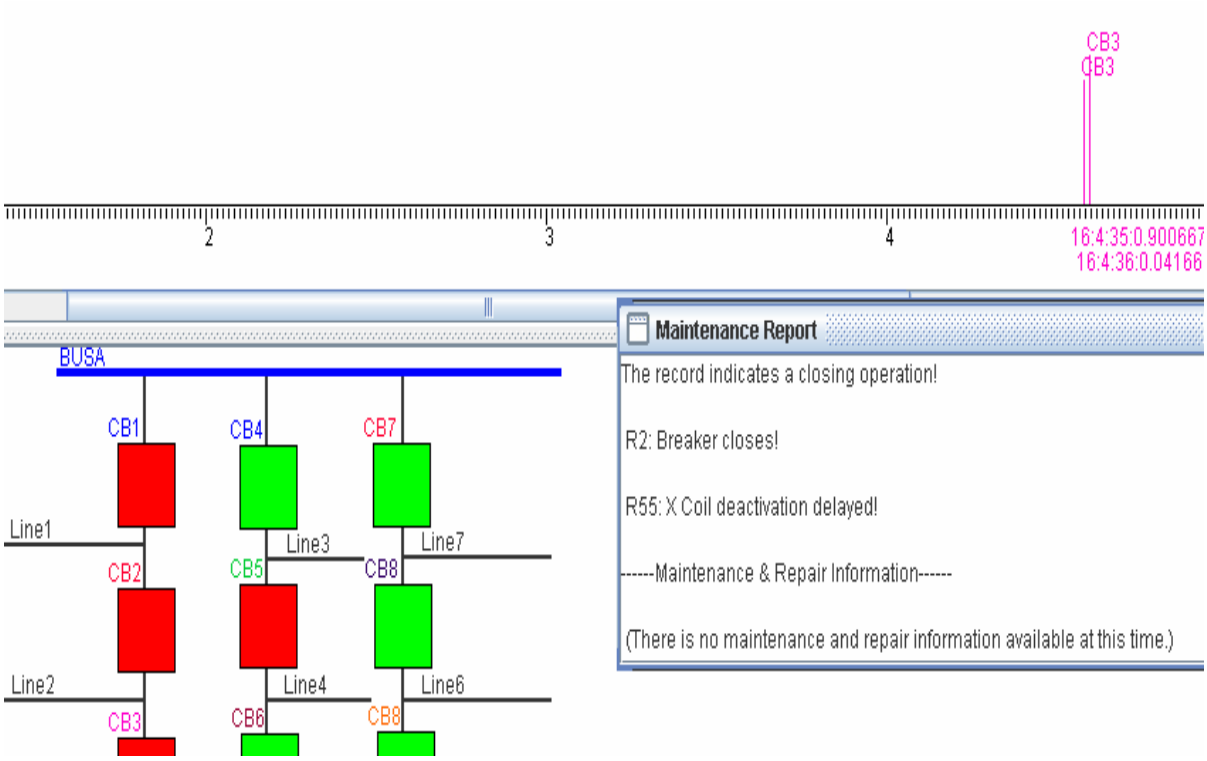


Fig. 2.5: Example of maintenance report after closing event on CB3

### 2.1.3 Demonstration of analysis of sequence analysis

In this section sequence-of-operation analysis report will be presented showing the test cases that have been executed.

**C.** In the case of a fault on Line1, protective relay(s) should send trip signals to CB1, CB2 and corresponding breakers on the other side of the line. The breakers should open and disconnect faulted Line1 from the rest of the circuit [1].

The CBM device [5] sends event files to the Client application in substation. Events are processed by the application software. If both breakers in this case are successfully opened and events on breakers CB1 and CB2 happened between *TRIP time and (TRIP time + tolerance time*) we consider Line 1 opening successful. Fig 2.6 shows view of the Sequence Analysis application after two opening events happened, first on a CB1 and second on a CB2. The Sequence report made correct conclusion about faulty line Fig 2.6.

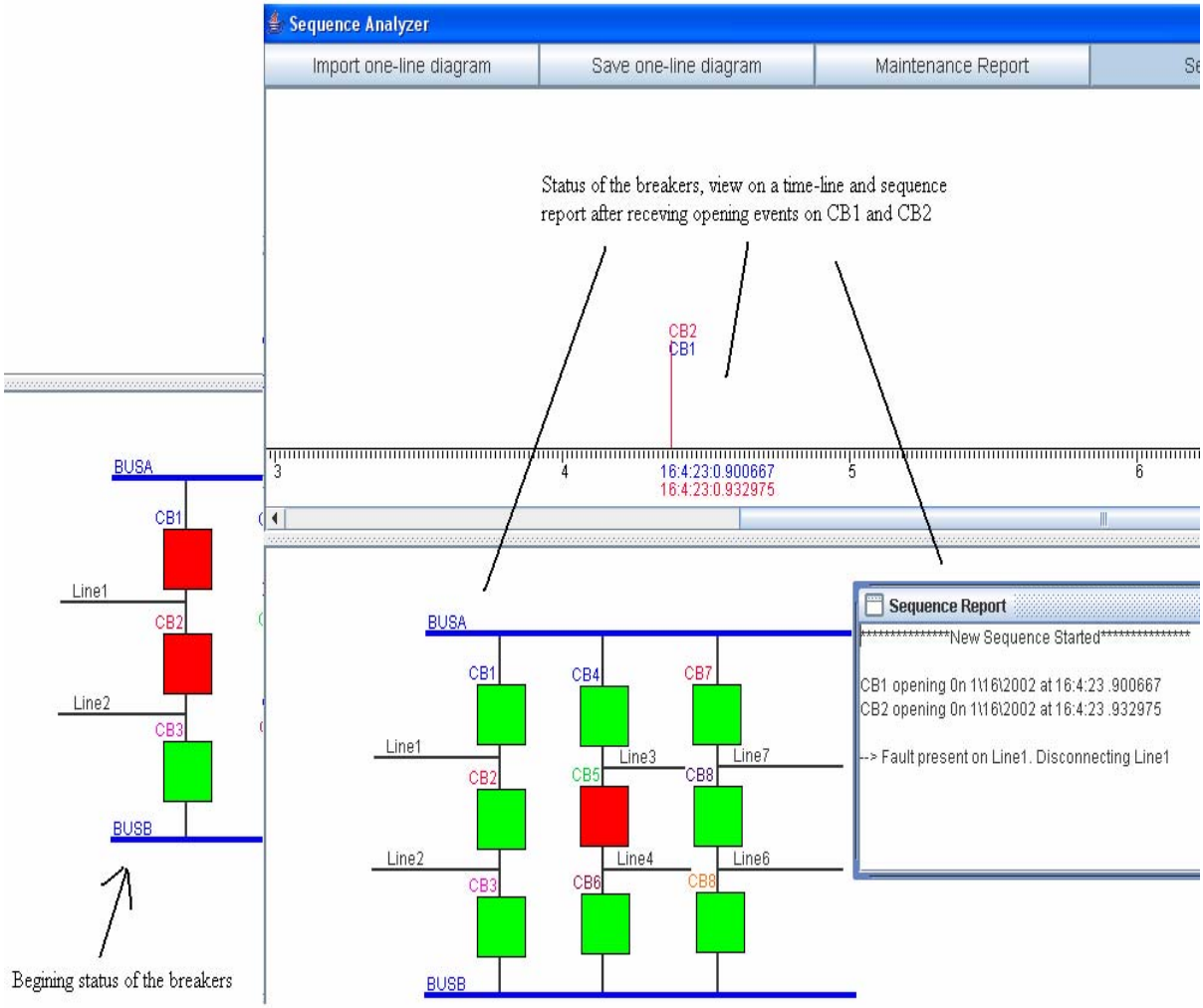


Fig. 2.6: Example of sequence report after trip event on CB1 and CB2

**D.** In the case of a permanent fault on Line1, protective relay(s) should send trip signals to CB1, CB2 and corresponding breakers on the other side of the line. Breakers should open and disconnect faulted Line1 from the rest of the system. Breakers are set so that after some time they will reclose automatically to check whether the fault is cleared. If fault is still present they will be tripped again. If the fault is still present after multiple automatic reclosures, there will be no more attempts to close breakers automatically. They will have to be closed manually (for more information about reclosing see [1]).

Fig 2.7 shows view of the Sequence Analyzer report in case of a breaker lockout.

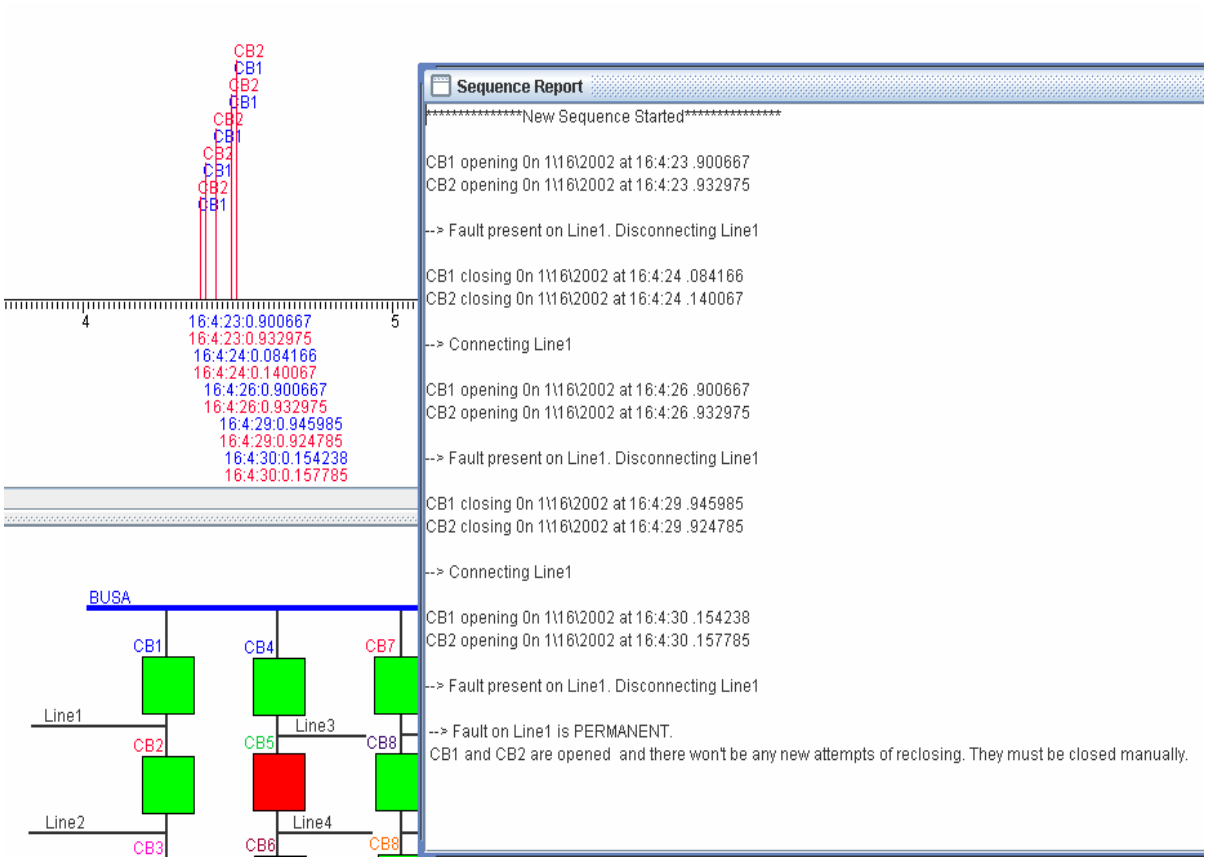


Fig. 2.7: Example of sequence report after permanent fault is present on Fault 1

Sequence report shows all attempts of opening and closing CB1 and CB2. From the time-line view it can be easily seen that the complete sequence is executed between 4$^{th}$ and 5$^{th}$ minute, which means that complete sequence is executed correctly. After that software made final conclusion that there were no more attempts of closing CB1 and CB2. Final conclusion brought y the analysis is correct:

--> Fault present on Line1. Disconnecting Line1

--> Fault on Line1 is PERMANENT.
CB1 and CB2 are opened and there won't be any new attempts of reclosing. They must be closed manually.

**E.** In case **A** if CB1 gets stuck, BUS A should be disconnected by opening all breakers on BUS A.

After runing breaker failure test cases, application changed status of the breakers as shown on Fig 2.8.

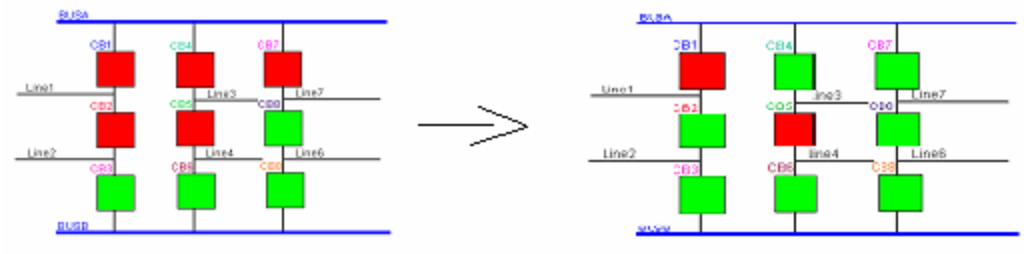


Fig. 2.8: Status of CBs before and after CB failure logic was fired

Sequence report will track all the events and confirm correctness of the breaker failure logic as shown on Fig 2.9. Time line shows "?" next to CB1, marking this event as problematic. By clicking the right click on that event, the maintenance report pops up with detailed description of the problem on CB1.

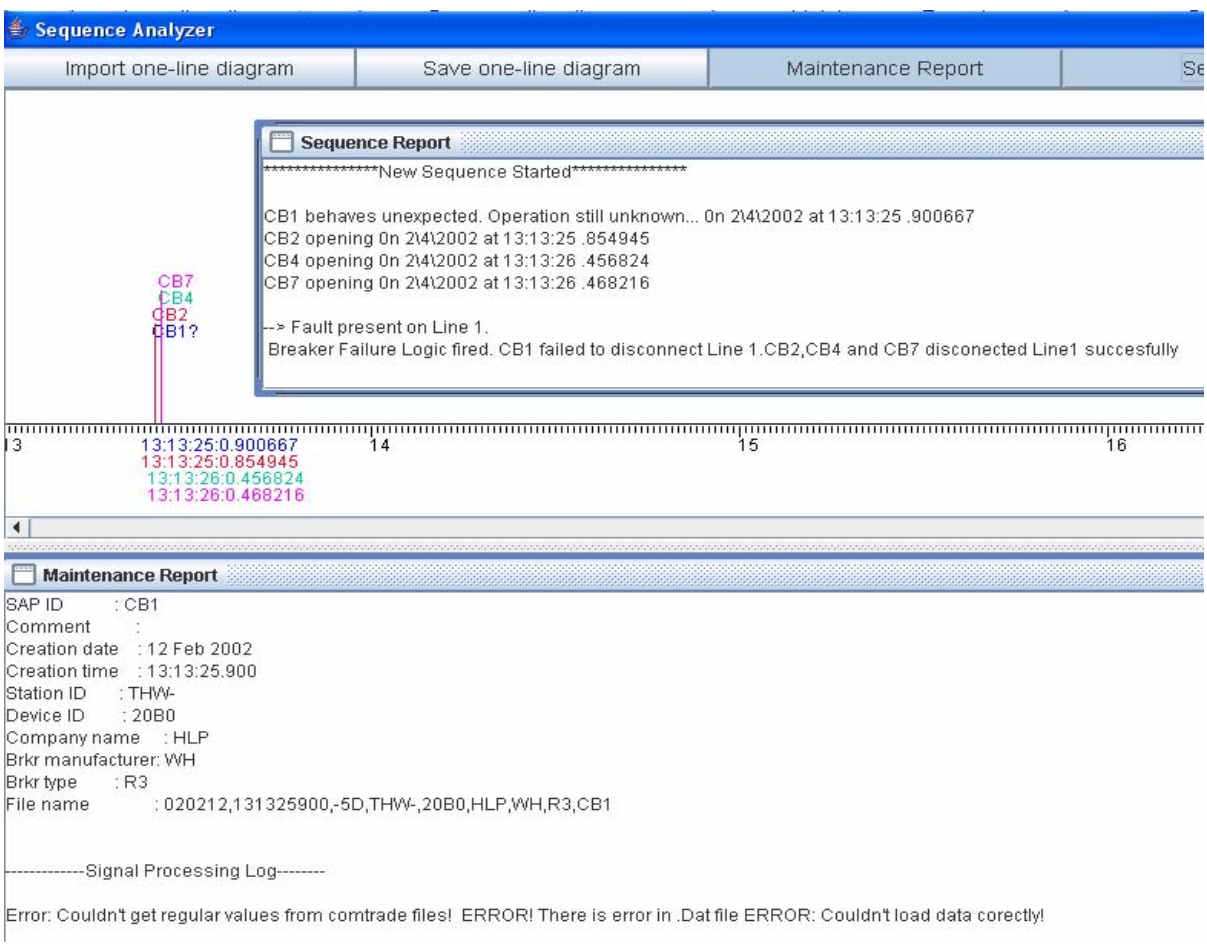


Fig. 2.9: View of time-line and reports after CB1 failed to disconnect Line1

**F.** In case **A** if CB2 gets stuck neighbouring breakers should be opened, in this case breakers CB3 and corresponding breakers on the other side of Line2 .

After runing breaker failure test cases, application changed status of breakers as shown on figure 2.10.

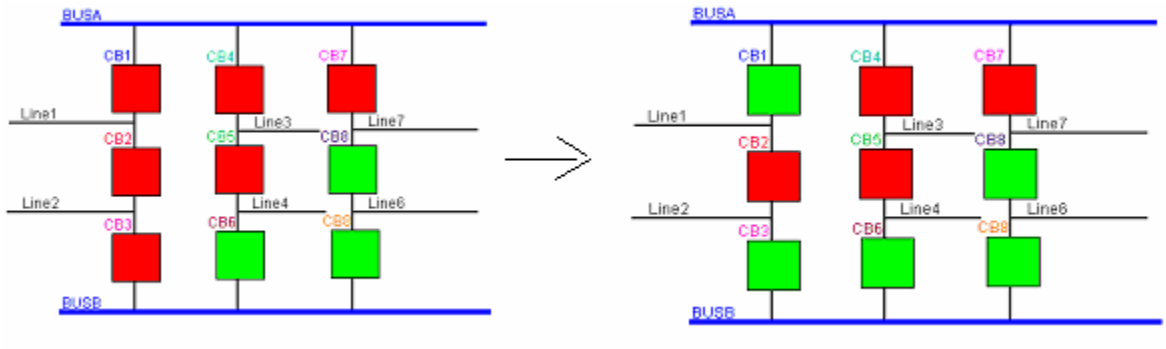


Fig. 2.10: Status of CBs before and after CB failure logic was fired

This time application marks event on CB2 as faulty one and brings correct conclusion that breaker failure logic is fired as shown on Fig 2.11.

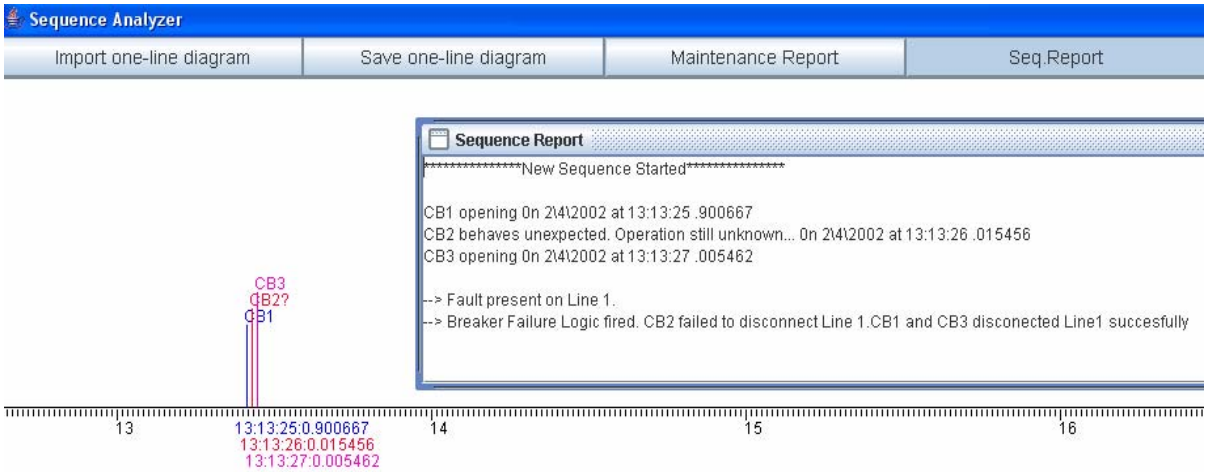


Fig. 2.11: View of time-line and sequence report after CB2 failed to disconnect Line1

## 3. Status of hardware

Two Circuit Breaker Monitors (CBMs) were developed and installed in a substation at CenterPoint Energy (CNP). Final test results and design of CBMs are documented in [5]. Fig 3.1 and Fig 3.2 show current status of each CBM unit in substation.

Fig. 3.1: CBM1 in substation field

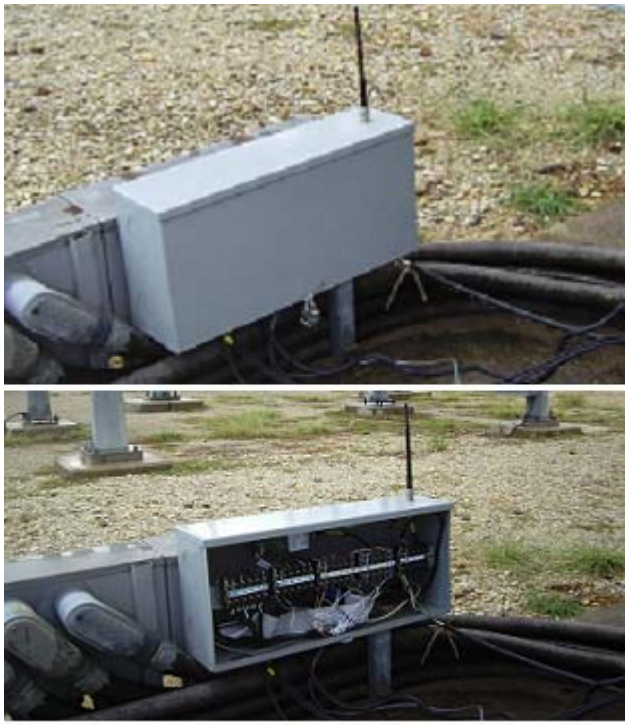

Fig. 3.2: CBM2 in substation field

## 4. Conclusion

In modern control centers, system operators get alarm messages from many devices in real time. From alarms, it is still very hard to find out location and type of the potential equipment problem. One needs an automatic way of processing the events to identify whether sequences of equipment operation were as expected. Instead of many alarm messages, only one report should be sent to the operators with concise information about success or failure of a switching sequence. In the case of a breaker, report will offer more detailed message whether the breaker failure logic worked out properly and finally disconnected faulted section. This kind of analysis enables tracking of every CB operation allowing reconstruction of an entire sequence of operations.

This document presents the results of the initial testing of software and hardware developed for DOE by Texas Engineering Experiment Station. Although test sample was very small, results were very promising. The test cases presented in the report are related to small sample of cases and cannot be assumed to express software performance completely. In most cases analysis gave correct conclusion for bus arrangement that is used in the spatial representation of the system. In particular, sequence analysis has been developed for the case of breaker-and-a-half bus arrangement. There are other bus arrangements that should be covered also.

It will be very beneficial to receive real data from more CBMs in the future. Using diverse units is more likely to reveal some potential deficiencies of the software and algorithm. That would require work on improvements and eventually lead to gaining more confidence in the software capabilities.

## REFERENCES

[1] M. Kezunovic, M. Knezev, Automated Circuit Breaker Monitoring - Software Requirements Specification Version 2.5, DOE - CERTS, June 2006.

[2] Final Report of IEEE Power System Relaying Committee Working Group H8, 2001, "File Naming Convention for Time Sequence Data", *Fault Disturbance Analysis Conference*, Atlanta, Georgia

[3] IEEE Std. C37.111-1991 "*IEEE Standard Common Format for Transient Data Exchange (COMTRADE) for Power Systems*", IEEE Inc.,1991

[4] IEEE Inc., 1999 "IEEE Standard Common Format for Transient Data Exchange (COMTRADE) for Power Systems", IEEE Std. C37.111-1999

[5] M. Kezunovic, Z. Djekic, Automated Circuit Breaker Monitoring – Hardware Implementation, Final report for FY 06, DOE - CERTS, August 2006.