PSERC

EVALUATING PROTECTIVE RELAY OPERATION THROUGH TESTING

Mladen Kezunovic

Eugene E. Webb Professor

Texas A&M University

PSERC Seminar, April 6, 2004

Outline

PSERC

- Why relay testing?
- What is the relay performance of interest?
- What is the existing relay test practice?
- How the existing practice may be enhanced?
- What would be the new (preferred) testing methodology and tools?
- What would be the benefits?
- Conclusions
- Q/A

Why Relay Testing?

PSERC

- This varies according to specific needs:
  - verify that a relay product is acceptable (production)=Type test
  - verify that relay settings are calibrated and relays are connected correctly=Commissioning test
  - verify that a relay maintains correct calibration of settings=Periodic maintenance test
  - verify that the performance for a given application is adequate=Application test
  - explain relay miss operation= Troubleshooting test

Outline

PSERC

- Why relay testing?
- What is the relay performance of interest?
- What is the existing relay test practice?
- How the existing practice may be enhanced?
- What would be the new (preferred) test methodology and tools?
- What would be the benefits?
- Conclusions
- Q/A

What is the relay performance of interest?

PSERC

- Type, commissioning and periodic tests:
  - Correct operating characteristic (comparing to what is given in manuals)
  - Correct settings (comparing to what was calculated and entered)
- Application and troubleshooting tests:
  - Trip/no trip decision
  - If a correct trip, what is the operating time
  - If an incorrect trip, what was the reason

What is the relay performance of interest?

PSERC

- Recommended statistics:
  - Dependability (should trip when there is a fault)
  - Security (should not trip when there is no fault)
- Recommended practices after an event (Northeast black out of August 14, 2003):
  - NERC Actions, February 10, 2004
  - PSERC Group: Data Exploration and Requirements

NERC Actions:February 10, 2004

PSERC

- Overview of conclusions:

  - Available system protection technologies were not consistently applied to optimize the ability to slow or stop an uncontrolled cascading failure of the power system

- Overview of recommendations:

  - Improve system protection to slow or limit the spread of future cascading outages

Recommendations

PSERC

- Strategic (#5): Need to improve relay protection schemes and coordination
- Technical (#8): Improve system protection to slow or limit the spread of future cascading outages:

  a.) better application of Zone III relays

  b.) selective use of under-voltage load shedding

  c.) revision to the criteria for slowing/limiting propagation of cascading failures

Recommendation #8

PSERC

- #8a.: Zone III relays

  - Zone III relay should not operate at or below 150% of the emergency power rating of a line assuming .85% p.u. voltage and line phase angle of 30 degrees

  - Out of step conditions should not “confuse” the relay

- #8b.: Under-voltage load shedding

  -low voltage with both high and low frequencies should be considered

  - coordination with generator under- and over-frequency protection and controls

- #8c.: propose revisions to the planning criteria

PSERC Group for Data Exploration and Requirements

PSERC

- NERC Planning Standard specifies Testing and maintenance requirements: Responsibility for maintenance and/or testing
- Relay type,settings, targets and causes of trips were requested
- PSERC Group did not make any reference to the relay test data being available and used for blackout investigation
- Recommendation was to standardize data collection but NOT to perform any relay tests

Outline

PSERC

- Why relay testing?
- What is the relay performance of interest?
- What is the existing relay test practice?
- How the existing practice may be enhanced?
- What would be the new (preferred) test methodology and tools?
- What would be the benefits?
- Conclusions
- Q/A

What is the existing relay test practice?

PSERC

- Phasor testing procedure:
  - Uses traditional test sets (Doble, Megger, Omicron, Manta, etc)
  - Sets a fixed voltage and ramps current from zero until the relay operates
  - Repeats such a test for several operating points
  - Performs tests in the field or on a relay manufacturing floor

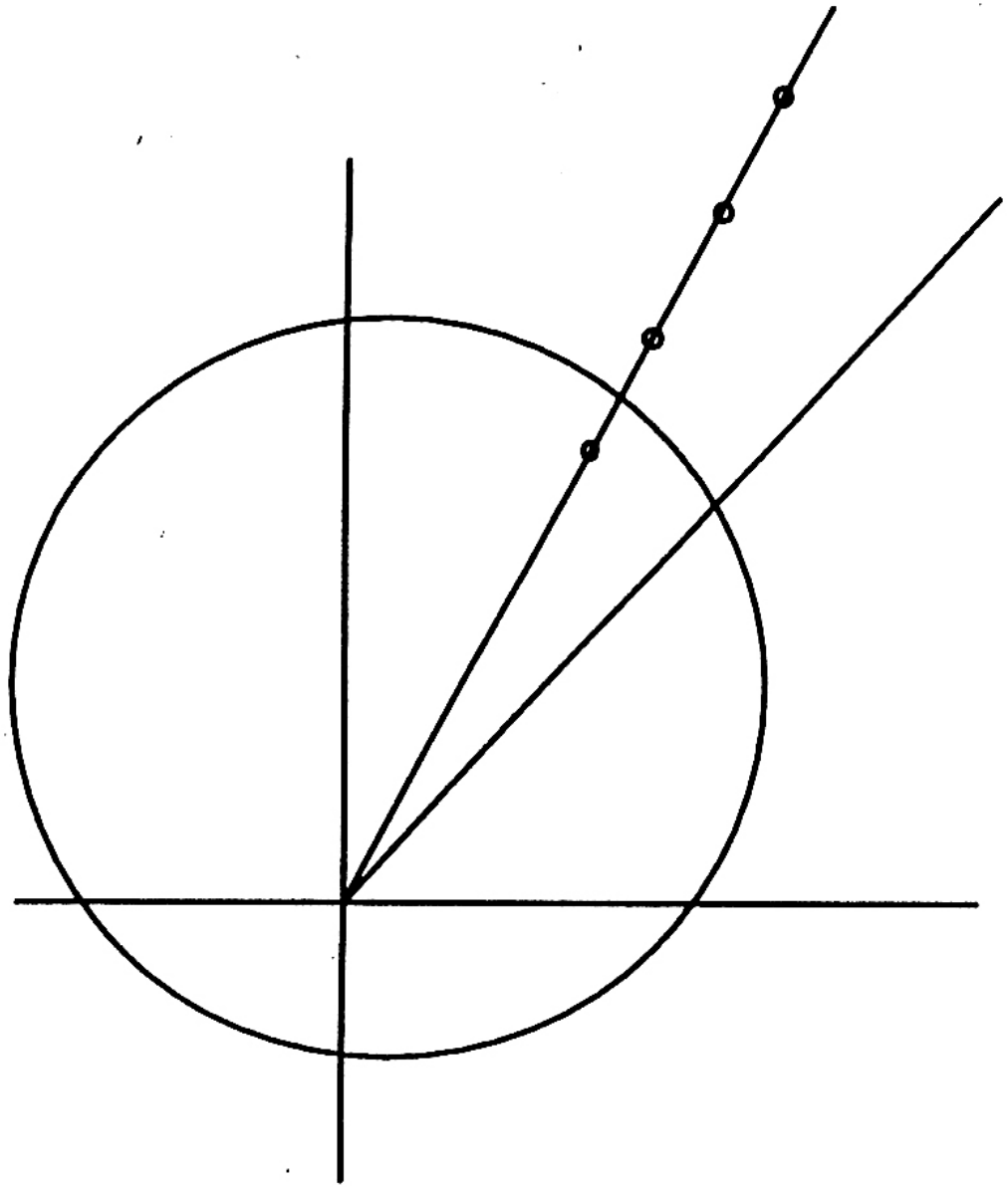

Outline

PSERC

- Why relay testing?
- What is the relay performance of interest?
- What is the existing relay test practice?
- How the existing practice may be enhanced?
- What would be the new (preferred) testing methodology and tools?
- What would be the benefits?
- Conclusions
- Q/A

How the existing practice may be enhanced?

PSERC

- Phasor testing:
  - More MEANINGFUL tests
  - BETTER testing TOOLS
- Transient testing:
  - use it to evaluation performance of relay products BEFORE PURCHASE
  - Use it to evaluate relay performance IN-SERVICE

Comprehensive list of Test Cases (Phasor Testing)

PSERC

- Case I: No prefault voltage and current
- Case II: No prefault current with prefault voltage
- Case III: with full load prefault current and voltage

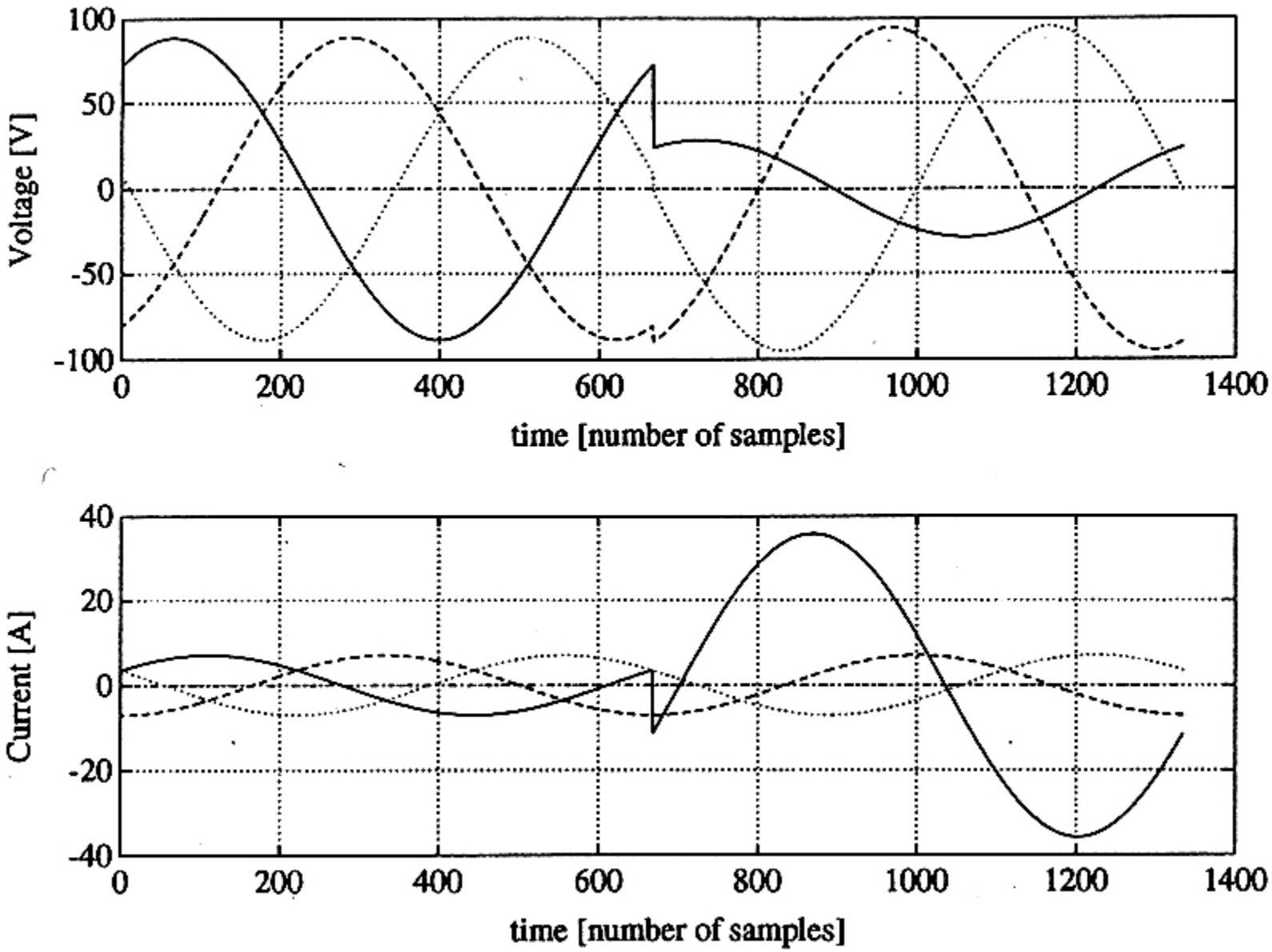

Artificial Test Waveforms

One-terminal system representation

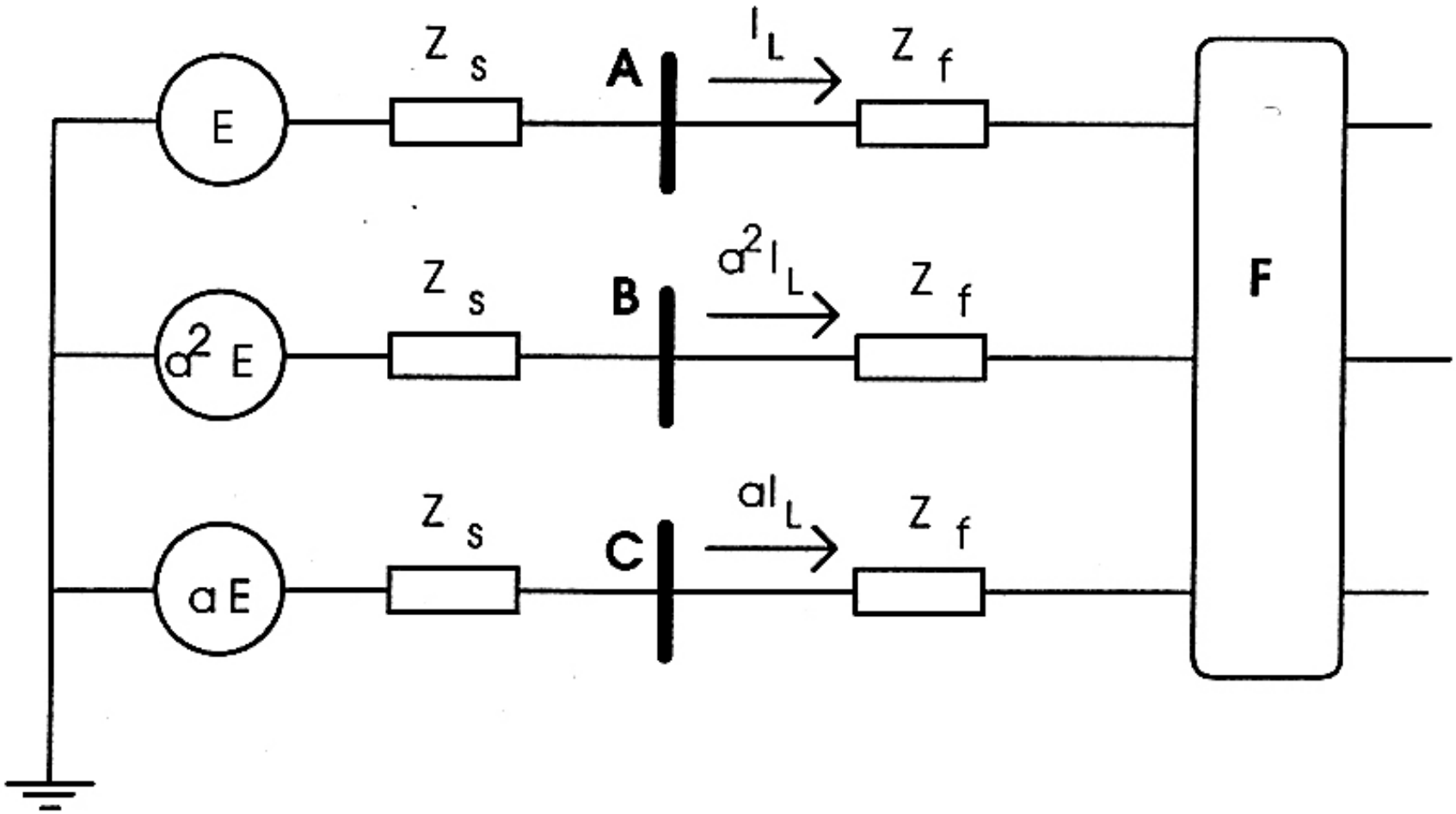

PSERC

- **Prefault test waveform**

$$V_{A,B,C} = f_{1,2,3}(E, I_L, Z_S)$$
$$I_{A,B,C} = f_{4,5,6}(E, I_L, Z_S)$$

- **Fault test waveform**

$$V_{A,B,C} = f_{I,II,III}(E, I_L, Z_S, Z_f)$$
$$I_{A,B,C} = f_{IV,V,VI}(E, I_L, Z_S, Z_f)$$

Prefault:

$$I_A = I_L\,; \qquad U_A = E - Z_{S1} I_L\,;$$
$$I_B = a^2 I_L\,; \qquad U_B = a^2 U_A\,;$$
$$I_C = a I_L; \qquad U_C = a U_A\,.$$

Fault:

$$I_A = \frac{3E}{(2+p)Z_{s1} + (2+q)Z_{f1}} + \frac{(p-1)Z_{s1} + (q-1)Z_{f1}}{(2+p)Z_{s1} + (2+q)Z_{f1}} I_L$$

$$I_B = a^2 I_L\,; \quad I_C = a I_L$$

$$U_A = \frac{(2+q)Z_{f1}}{(2+p)Z_{s1} + (2+q)Z_{f1}} E + \frac{(p-q)Z_{s1}Z_{f1}}{(2+p)Z_{s1} + (2+q)Z_{f1}} I_L$$

$$U_B = a^2 E + \frac{(1-p)Z_{s1}}{(2+p)Z_{s1} + (2+q)Z_{f1}} E + \frac{K_1 Z_{s1}{}^2 + K_2 Z_{s1} Z_{f1}}{(2+p)Z_{s1} + (2+q)Z_{f1}} I_L$$

$$U_C = aE + \frac{(1-p)Z_{s1}}{(2+p)Z_{s1} + (2+q)Z_{f1}} E + \frac{K_3 Z_{s1}{}^2 + K_4 Z_{s1} Z_{f1}}{(2+p)Z_{s1} + (2+q)Z_{f1}} I_L$$

where $p = Z_{s0} / Z_{s1}$; $K_1 = (1-a^2)p - 1 - 2a^2$; $K_3 = (1-a)p - 1 - 2a$;
$q = Z_{f0} / Z_{f1}$; $K_2 = p - a^2 q - 1 - 2a^2$; $K_4 = p - aq - 1 - 2a$.

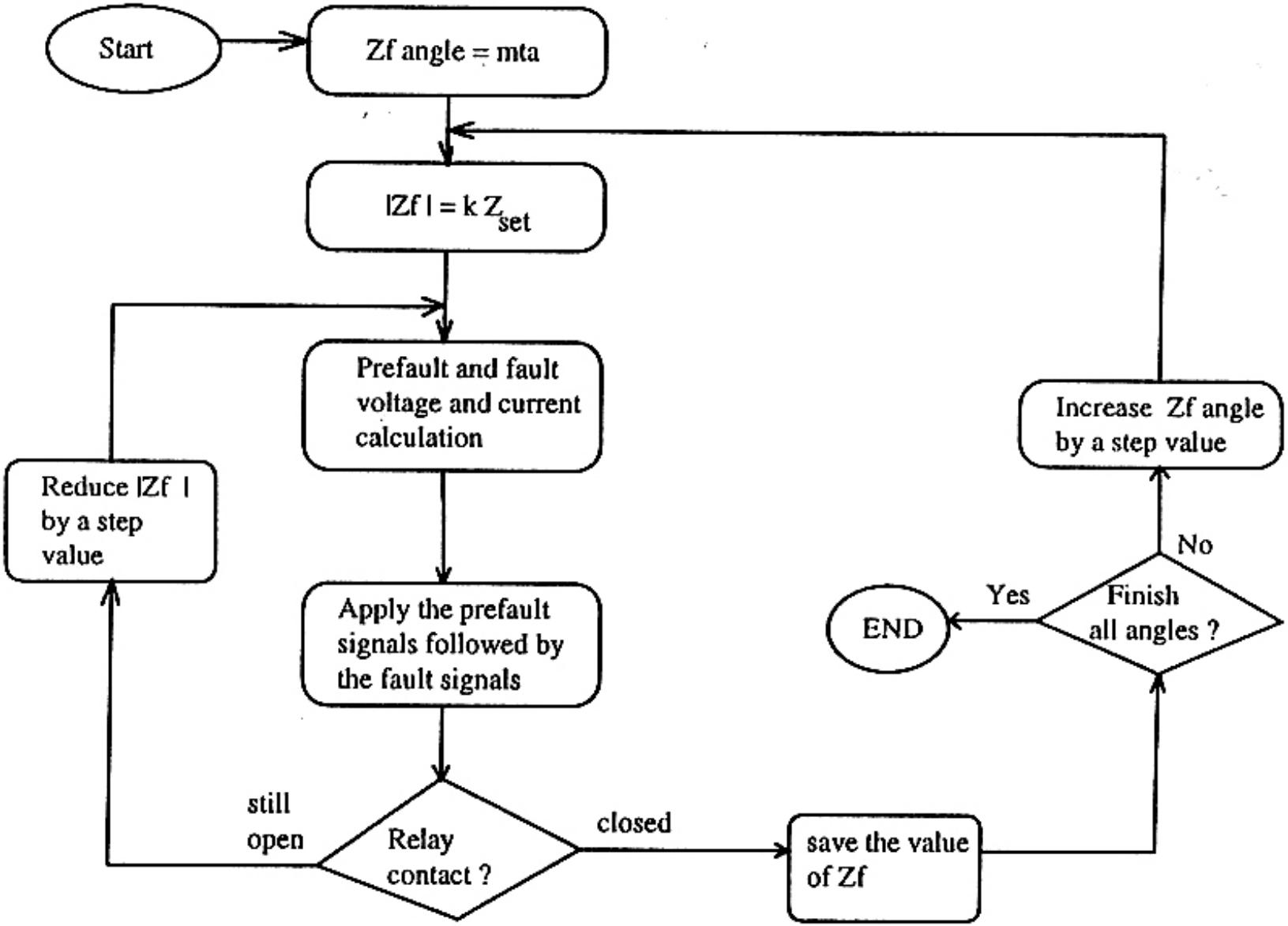
Start
Zf angle = mta
|Zf| = k Z_set
Prefault and fault voltage and current calculation
Apply the prefault signals followed by the fault signals
Relay contact ?
still open
closed
Reduce |Zf| by a step value
save the value of Zf
Finish all angles ?
Yes
No
END
Increase Zf angle by a step value

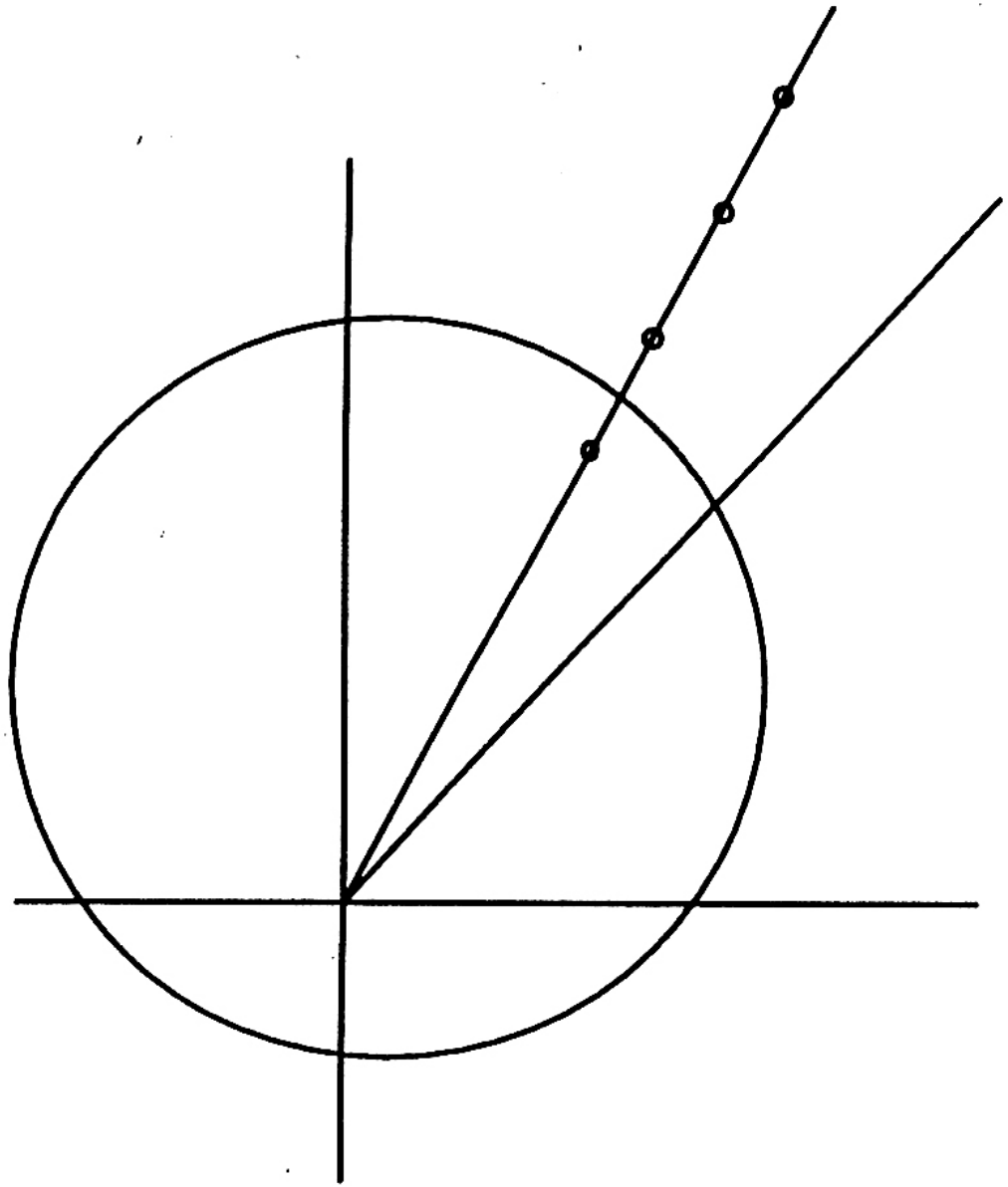

Test result summary

PSERC

- Different Cases
- Different fault types for the same relay
- Different relays
- Different load currents
- Different source impedance ratio

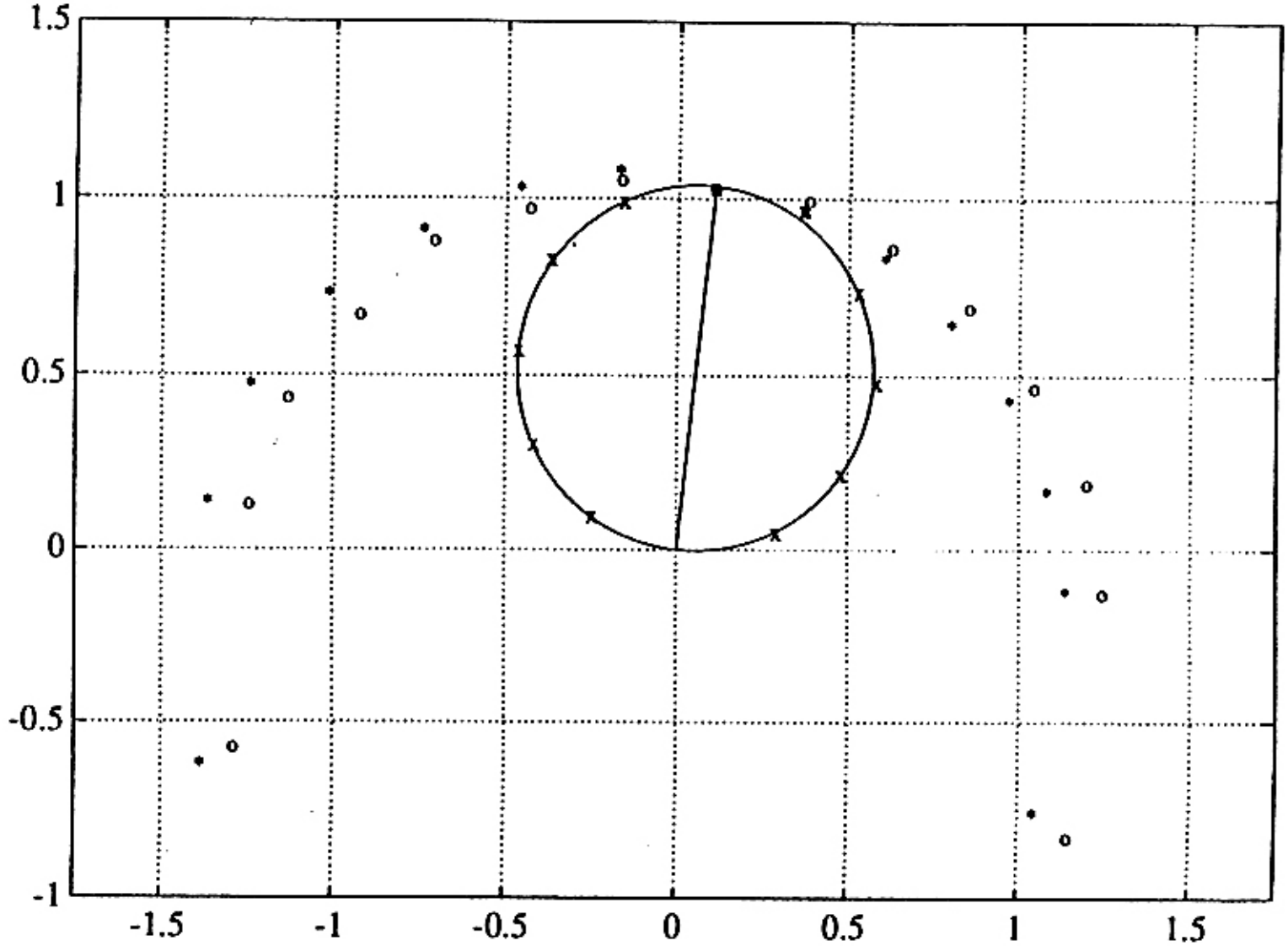

ABC fault

x: Case I o: Case II *: Case III

Test result summary

PSERC

Different Cases

→ Different fault types for the same relay

Different relays

Different load currents

Different source impedance ratio

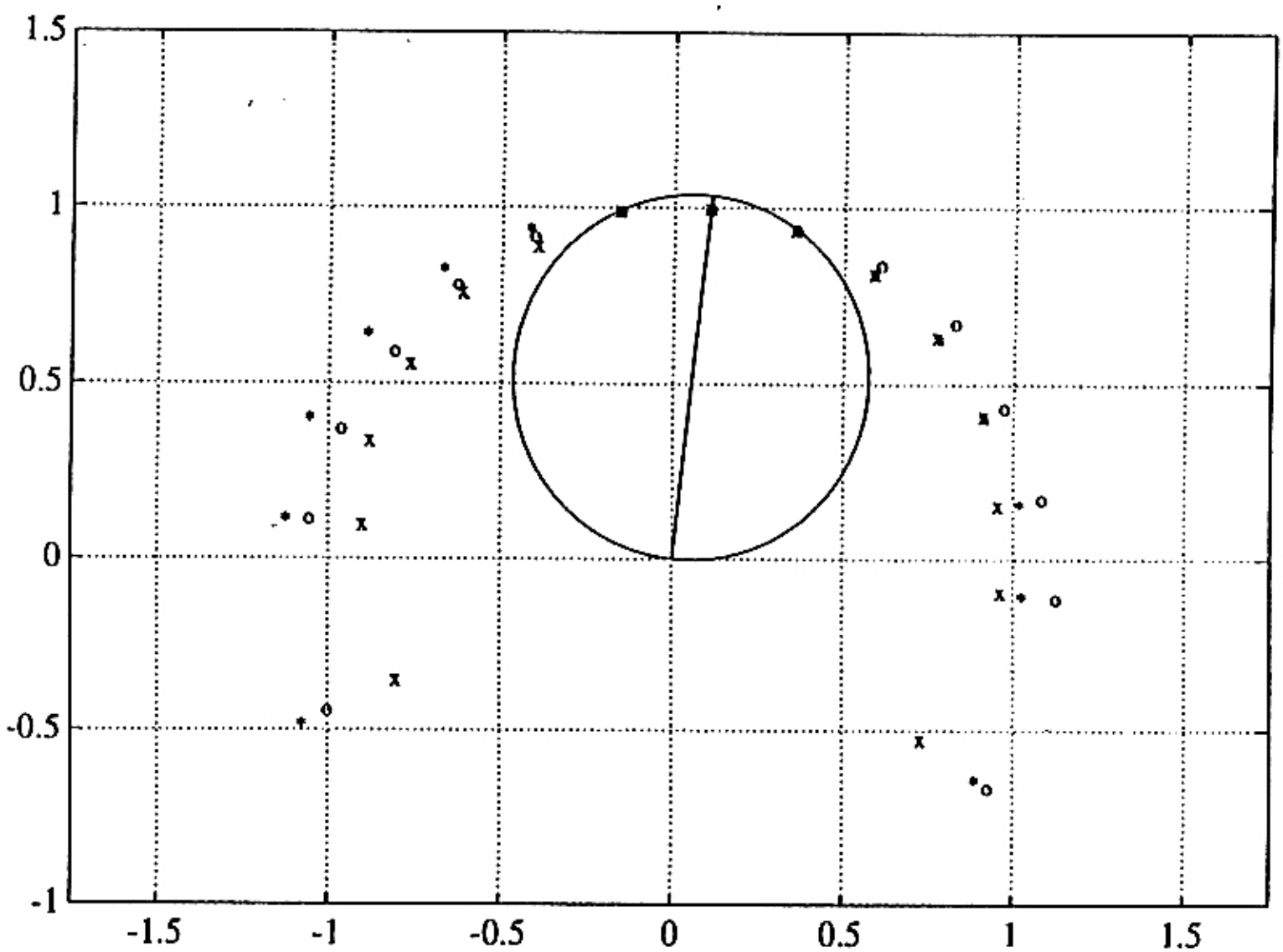

A-G fault (Relay A)

x: Case I o: Case II *: Case III

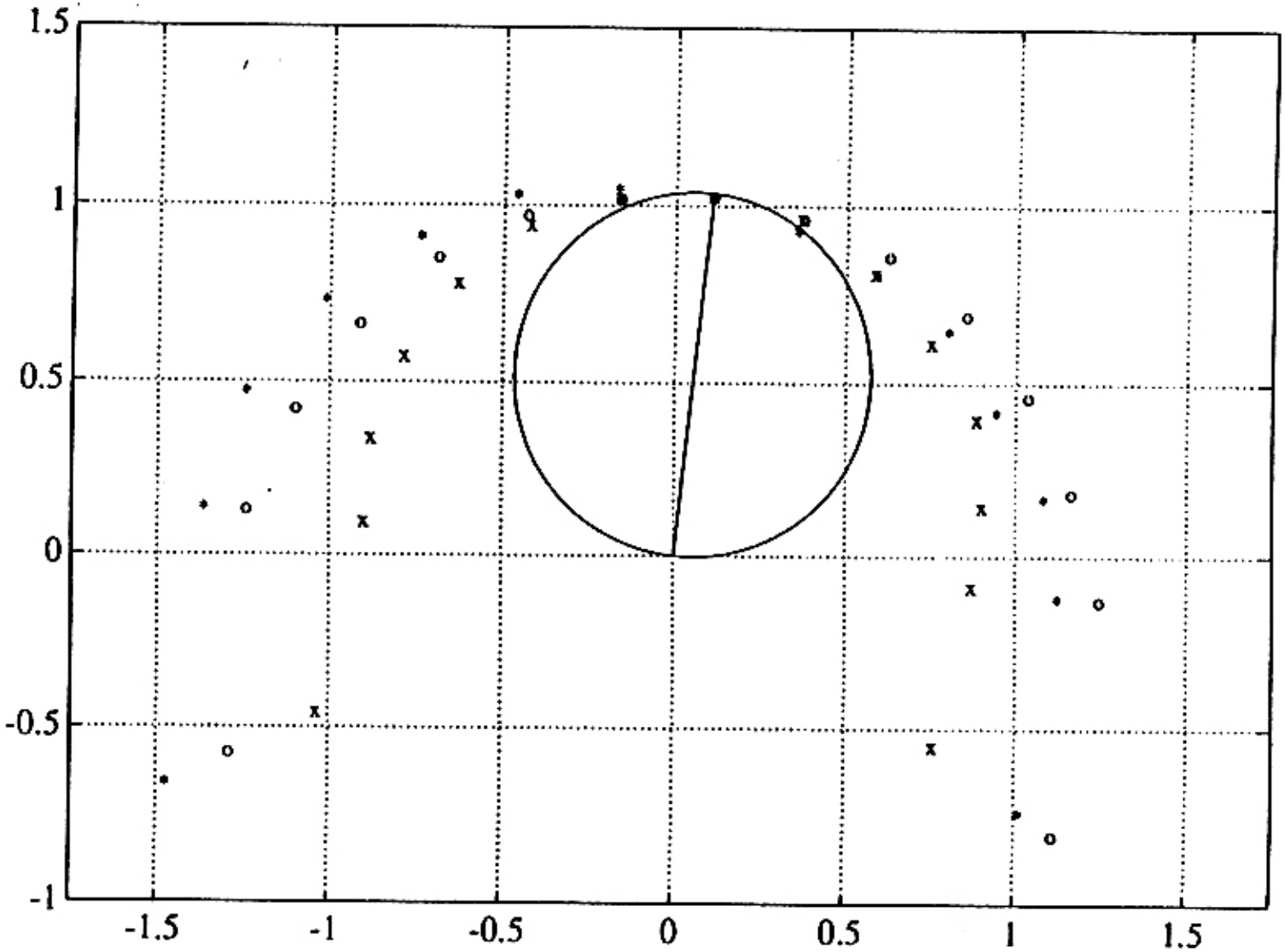

BC fault (Relay A)

x: Case I o: Case II *: Case III

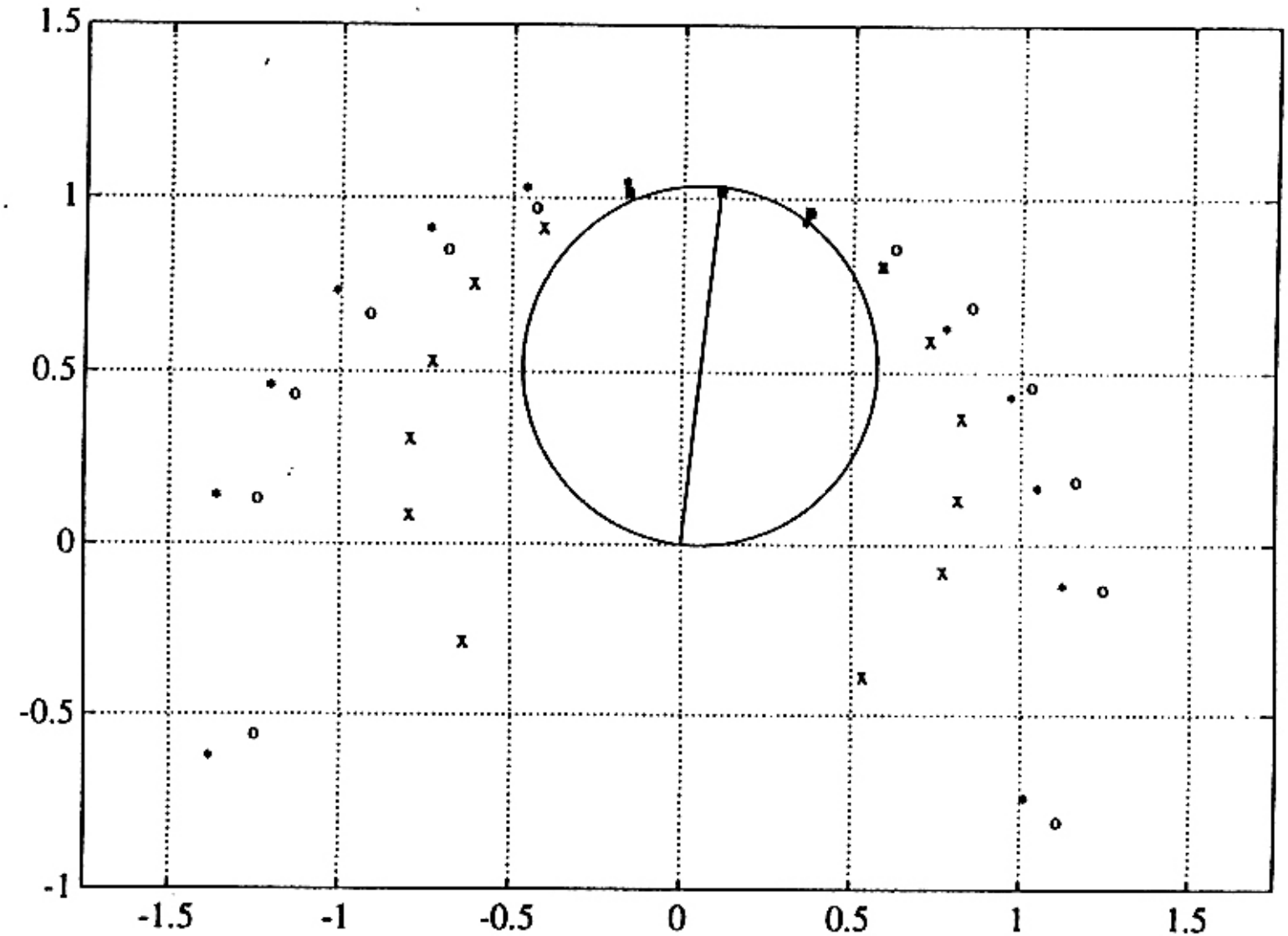

BC-G fault (Relay A)

x: Case I o: Case II *: Case III

Test result summary

PSERC

Different Cases

Different fault types for the same relay

→ Different relays

Different load currents

Different source impedance ratio

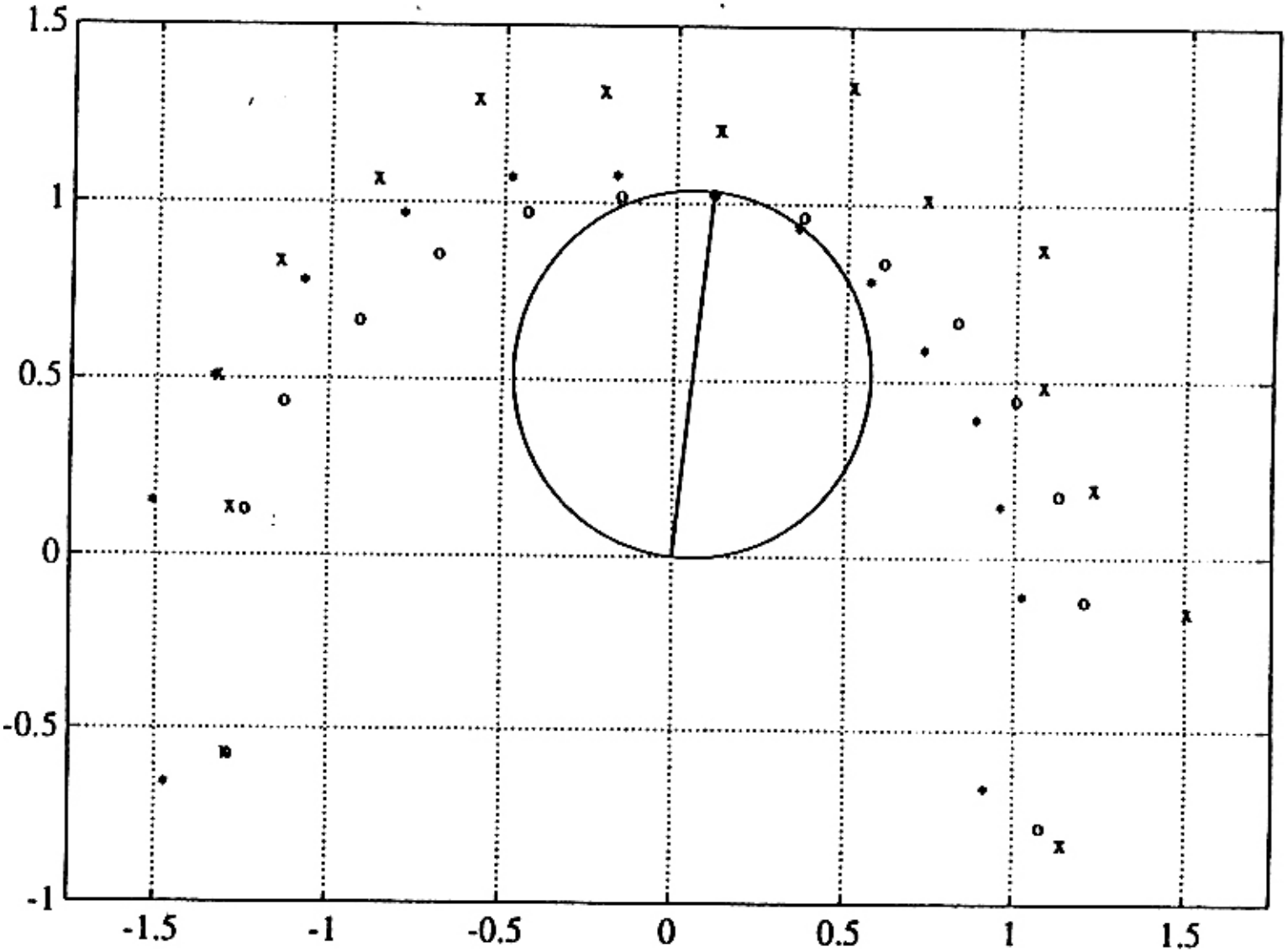

BC fault (Relay B)

x: Case I o: Case II *: Case III

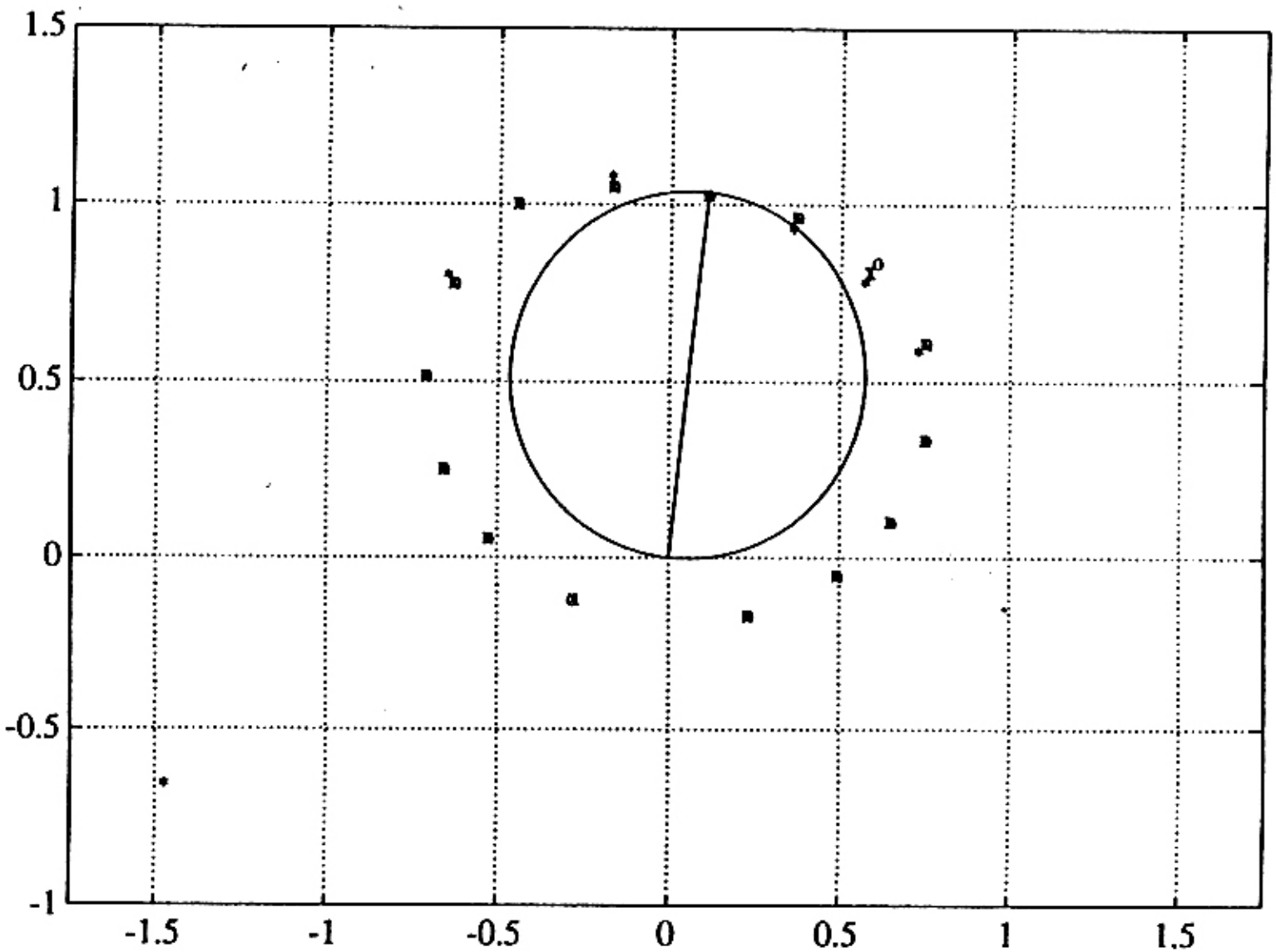

BC fault (Relay C)

x: Case I o: Case II *: Case III

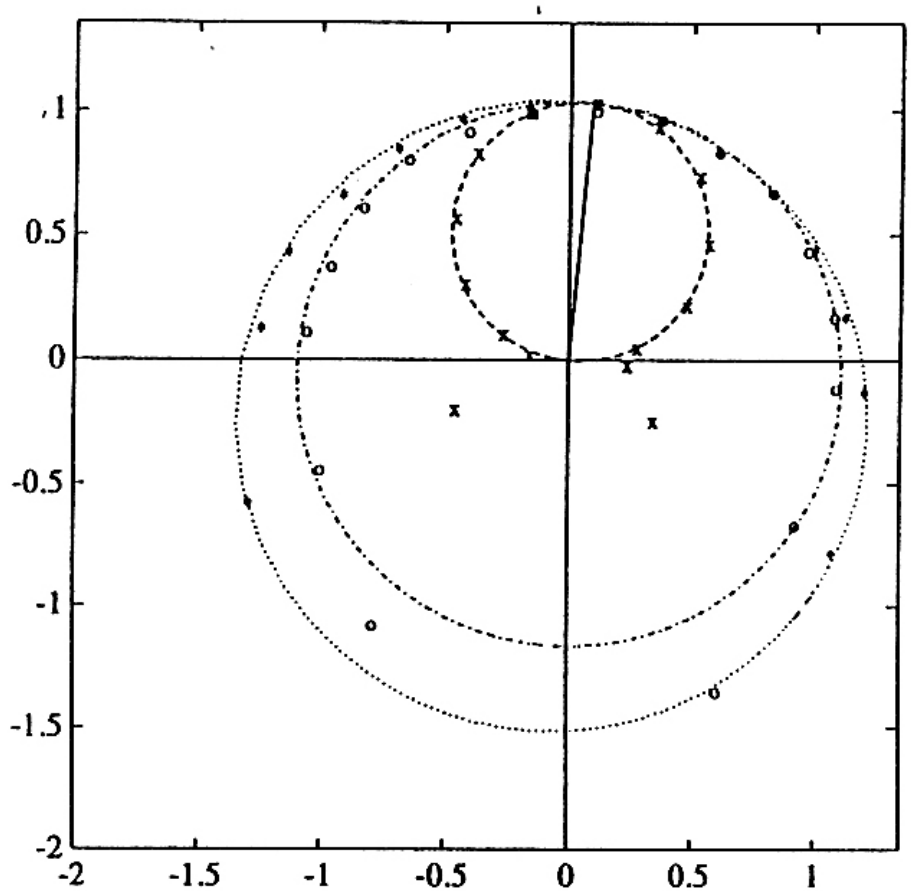

- - - - : Three-phase fault theoretical characteristics
-.-.-.- : Single-line-to-ground fault theoretical characteristics
…… : Line-to-line fault theoretical characteristics
x : Three-phase fault test results
o : Single-line-to-ground fault test results
* : Line-to-line fault test results

Comparison of theoretical analysis and test for Relay B

Test result summary

PSERC

Different Cases

Different fault types for the same relay

Different relays

→ Different load currents

Different source impedance ratio

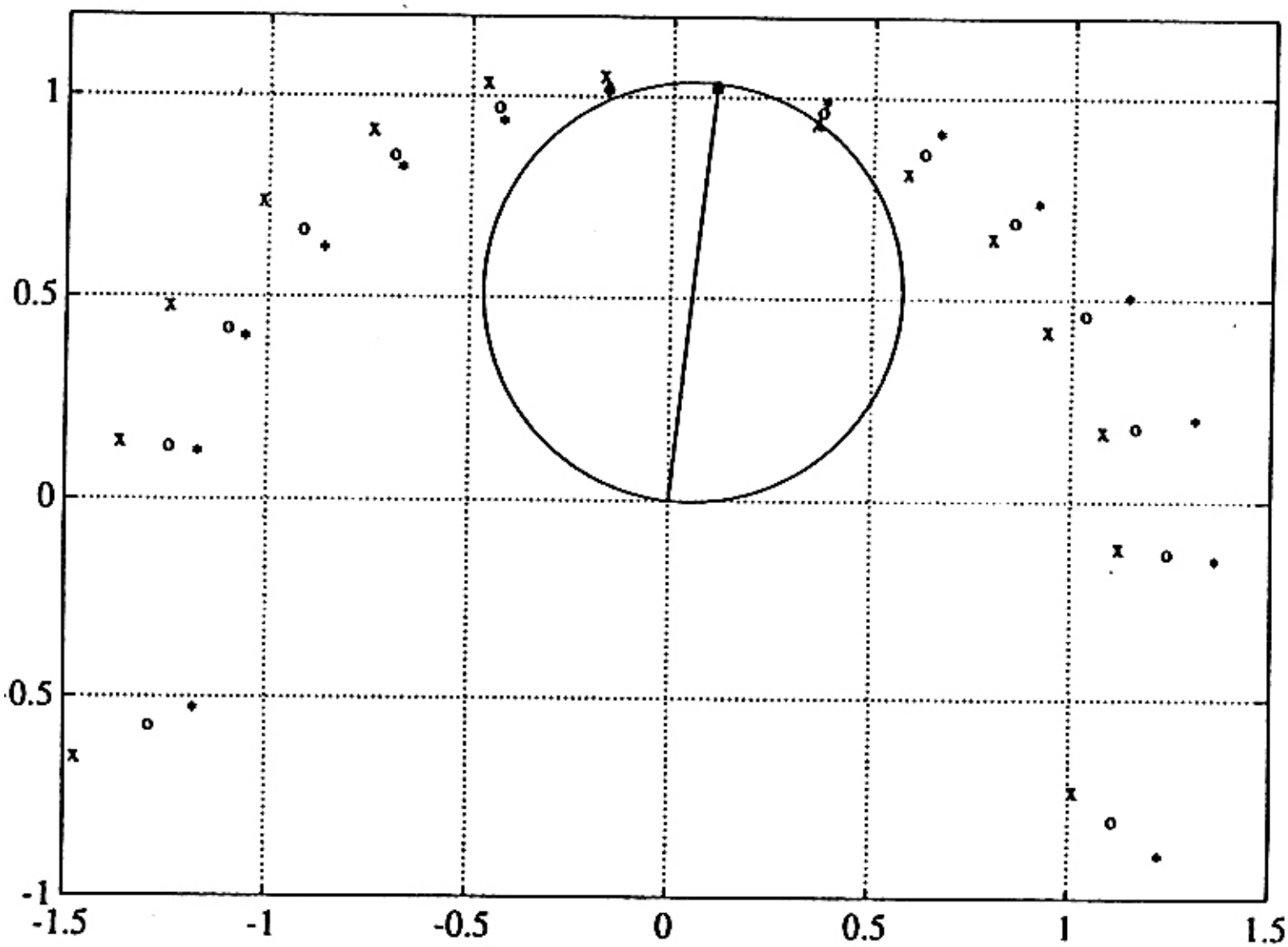

Relay A, BC fault

x: I = 5∠ -30 A; o: I = 0 A; *: I = 150∠ 150 A

Test result summary

PSERC

Different Cases

Different fault types for the same relay

Different relays

Different load currents

→ Different source impedance ratio

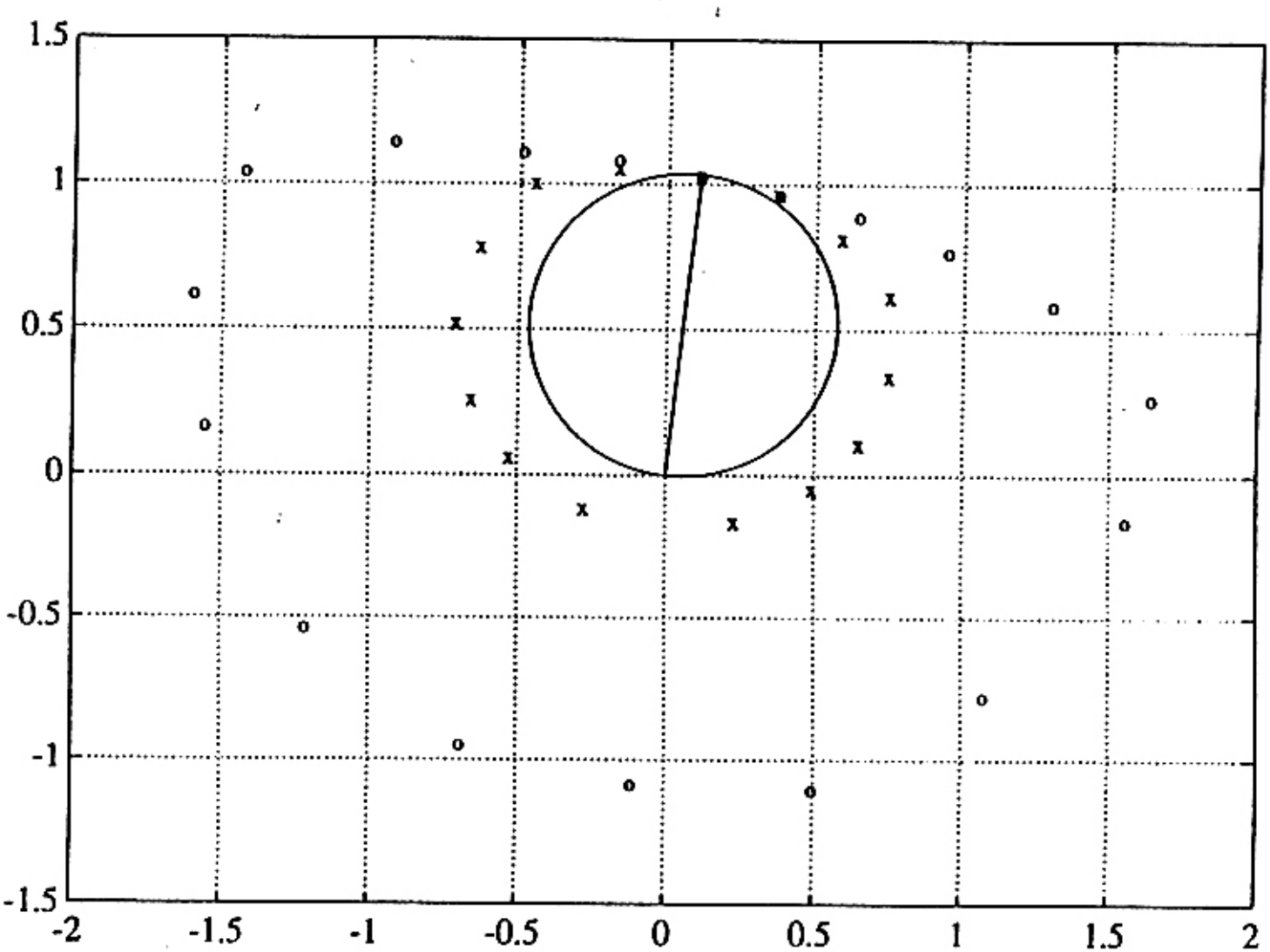

Relay C, BC fault

x: SIR = 1.24 o: SIR = 7.44

Two-terminal system representation

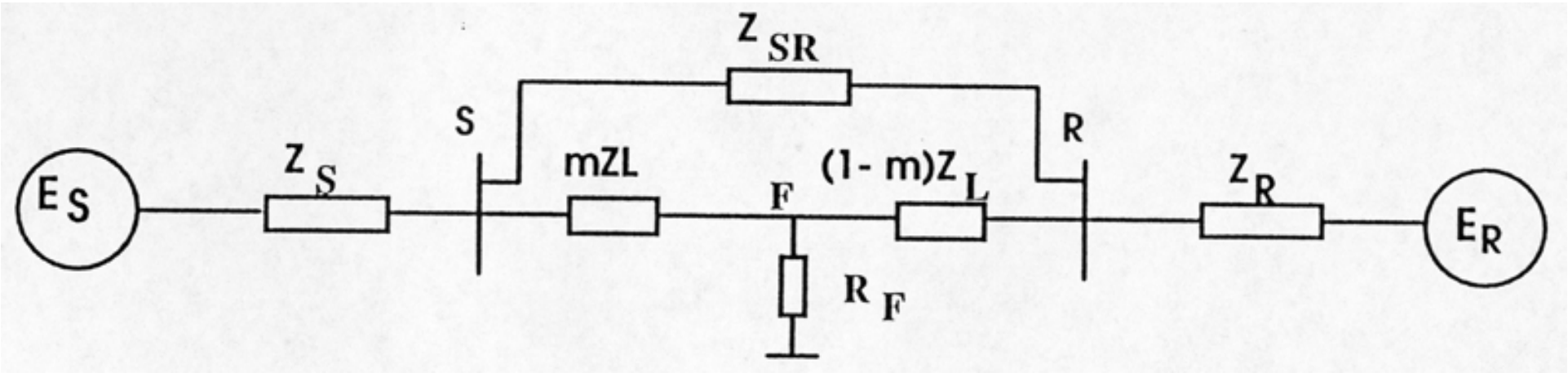

How the existing practice may be enhanced?

PSERC

- Phasor testing:
  - More MEANINGFUL tests
  - BETTER testing TOOLS
- Transient testing:
  - use it to evaluate performance of relay products BEFORE PURCHASE
  - Use it to evaluate relay performance IN-SERVICE

Transient Testing

PSERC

- Case I: Creating test waveforms through modeling and simulation
- Case II: Creating test test waveforms through replaying the field-recorded data
- Evaluating

  - Application: Correct/incorrect operation for a selected application

  - Statistical properties: trip/no trip decision and trip time for number of applications

Example: Application tests

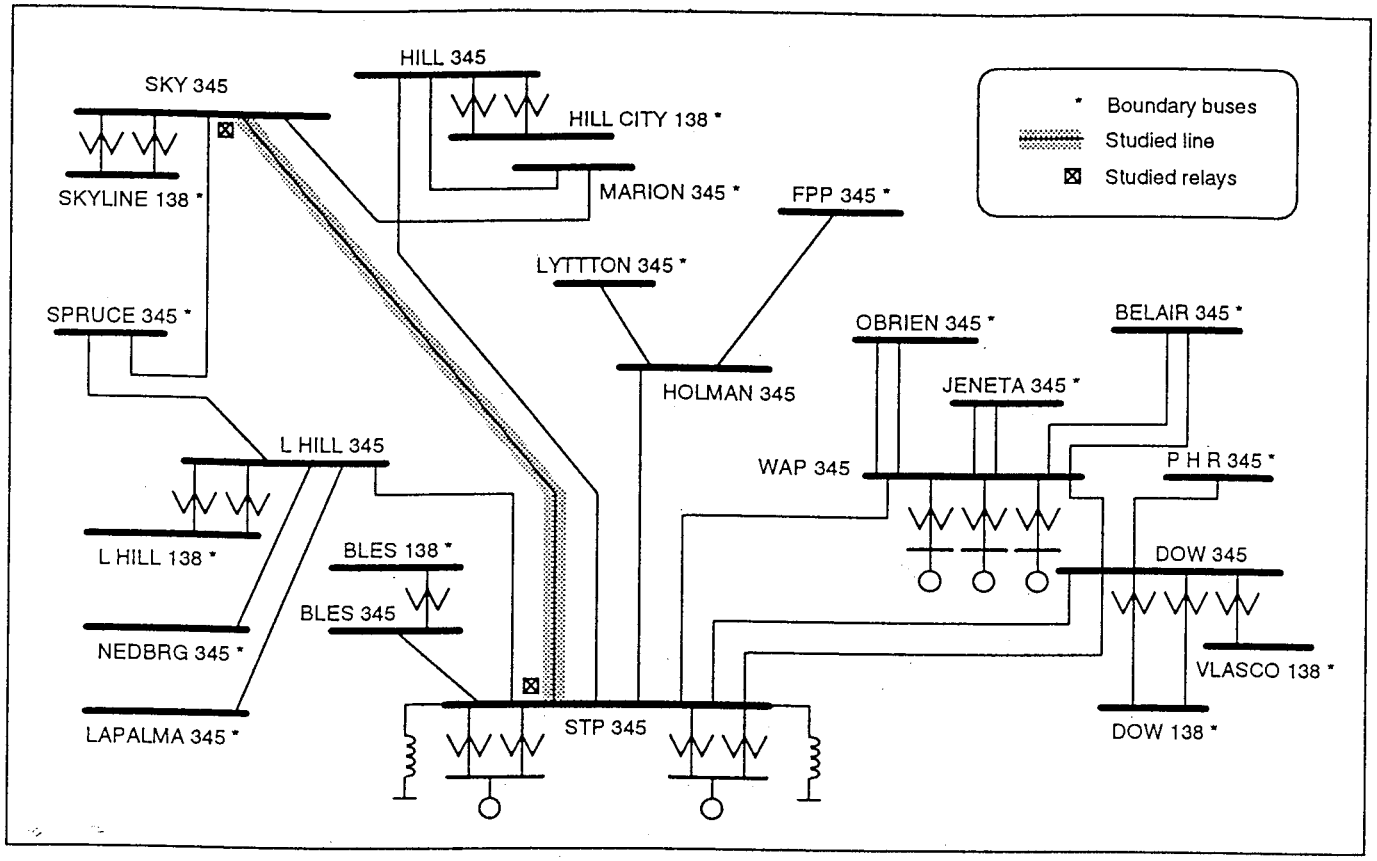

Example: Application tests

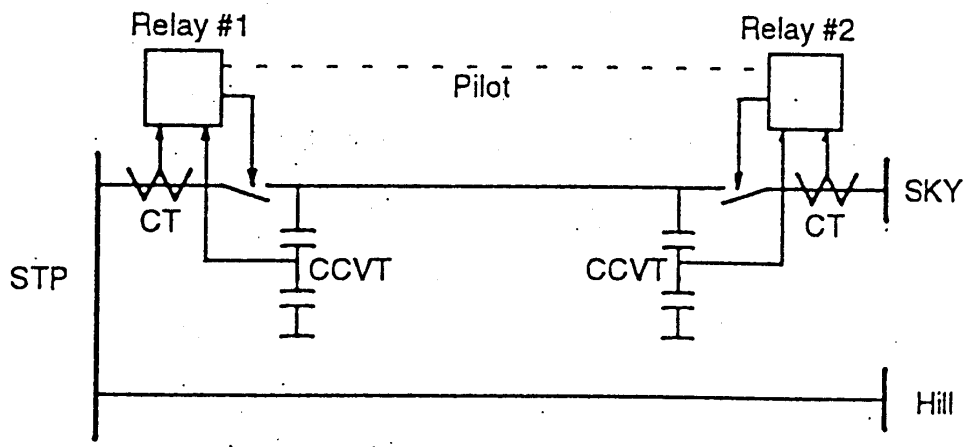

- Sequence of events:
  - fault on the STP-SKY line
  - Relay #2 trips first and sends the carrier signal
  - Relay #1 trips after receiving the carrier signal
  - the auto-reclosure is not successful and both relays trip

Example: Application Tests

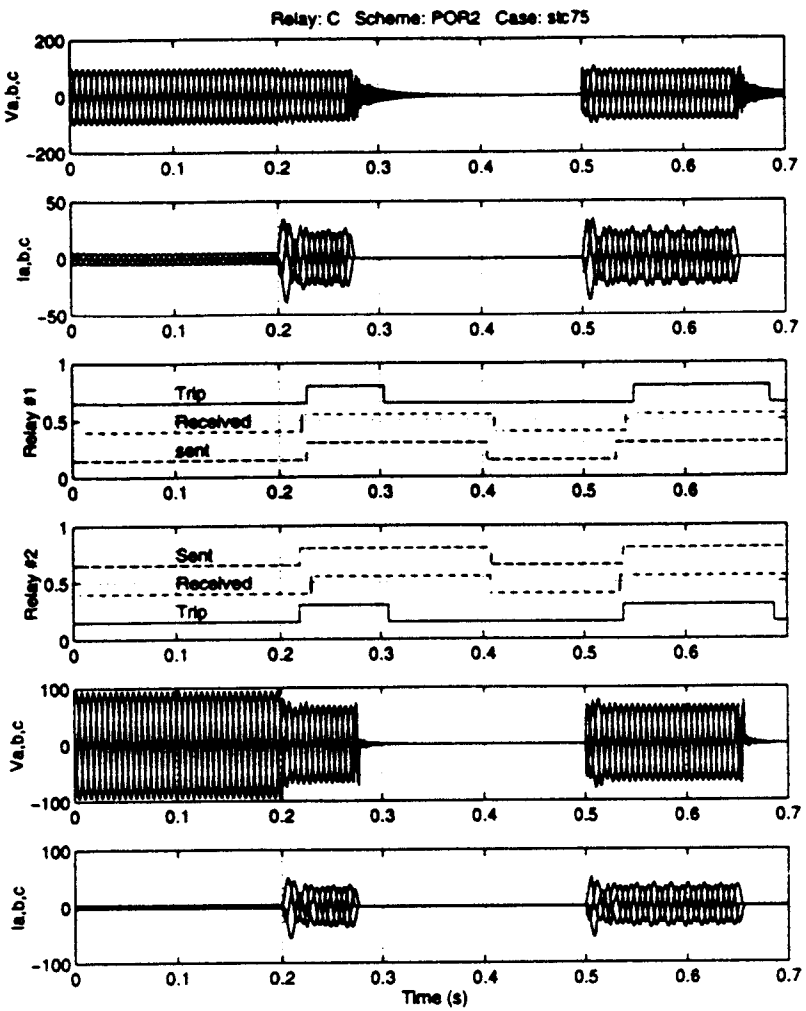

- Sequence of events:
  - fault on the STP-SKY line
  - Relay #2 trips first and sends the carrier signal
  - Relay #1 trips after receiving the carrier signal
  - the auto-reclosure is not successful and both relays trip

Example: Statistical Tests

PSERC

- Trip/no trip decision:
  - Repetitive tests to assess dependability/security
- Trip time:
  - Repetitive tests to assess application features (time coordination, etc.)

Example: Trip/No-Trip Evaluation

PSERC

Table III. Number of Trips out of 30 Tests

Fault Type & Locations	Relay A	Relay B	Relay C	Relay D*	Relay E*
A–G 50%	30	30	30	0	0
A–G 75%	30	30	30	0	0
A–G 80%	30	30	30	0	0
A–G 90%	0	**20**	0	0	0
A–G 95%	0	**19**	0	0	0
BC 50%	30	30	30	30	30
BC 75%	30	30	30	30	30
BC 80%	30	30	30	30	30
BC 90%	0	**12**	0	0	0
BC 95%	0	0	0	0	0
ABC 50%	30	30	30	30	30
ABC 75%	30	30	30	30	30
ABC 80%	30	30	30	30	30
ABC 90%	0	**30**	0	0	0
ABC 95%	0	0	0	0	0
BC–G 50%	30	30	30	30	30
BC–G 75%	30	30	30	30	30
BC–G 80%	30	30	30	30	30
BC–G 90%	0	**14**	0	0	0
BC–G 95%	0	0	0	0	0

Example: Trip time

PSERC

Type	Loc (%)	No.T	AvrgT (ms)	MaxT (ms)	MinT (ms)	Devtn
A-G	50	30	20.68	23.12	17.94	1.49
A-G	75	30	22.75	25.04	20.34	1.48
A-G	80	30	25.67	41.72	23.62	3.17
A-G	90	0	*****	*****	*****	****
A-G	95	0	*****	*****	*****	****
B-C	50	30	20.57	22.90	18.46	1.36
B-C	75	30	26.04	28.50	23.66	1.44
B-C	80	30	35.23	66.26	25.02	12.36
B-C	90	0	*****	*****	*****	*****
B-C	95	0	*****	*****	*****	*****
ABC	50	30	19.21	20.44	18.34	0.61
ABC	75	30	24.68	25.40	23.68	0.54
ABC	80	30	25.63	27.24	24.26	0.81
ABC	90	0	*****	*****	*****	****
ABC	95	0	*****	*****	*****	****
BCG	50	30	20.27	23.06	17.98	1.45
BCG	75	30	26.10	28.58	23.66	1.47
BCG	80	30	34.53	66.18	24.86	12.28
BCG	90	0	*****	*****	*****	*****
BCG	95	0	*****	*****	*****	*****

Example: Trip time (comparative)

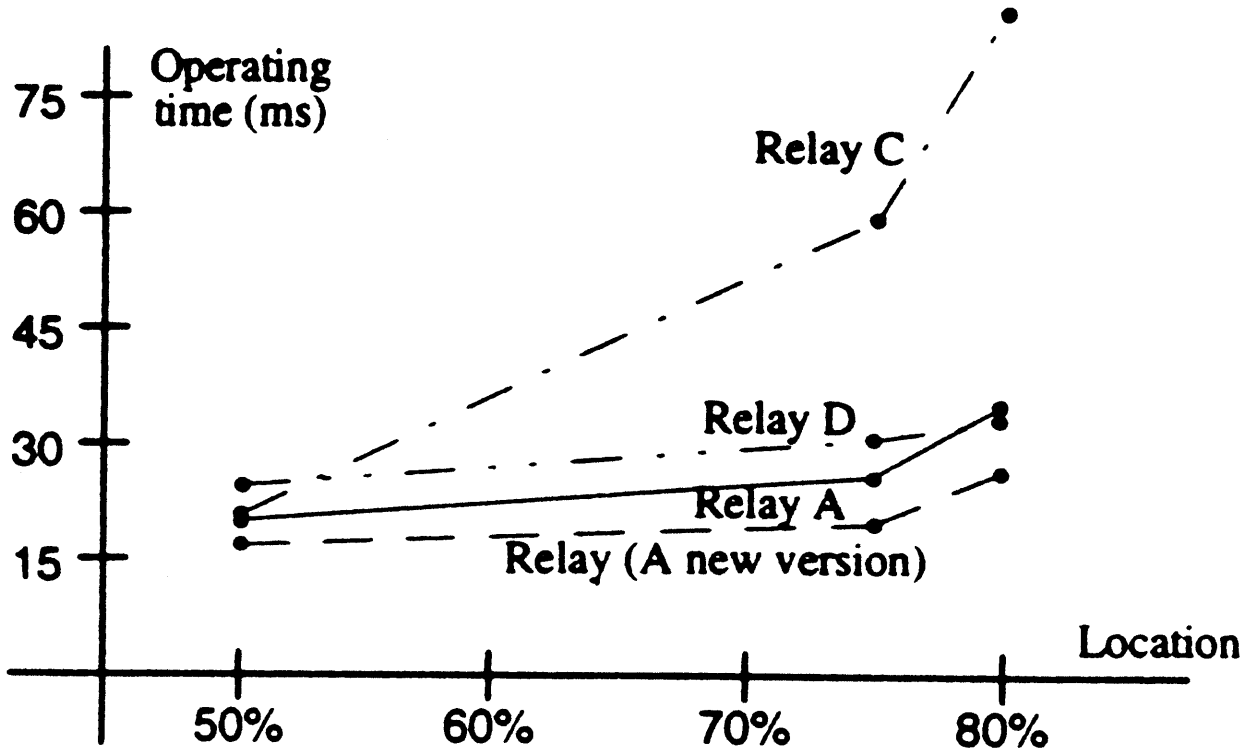

Outline

PSERC

- Why relay testing?
- What is the relay performance of interest?
- What is the existing relay test practice?
- How the existing practice may be enhanced?
- What would be the new (preferred) test methodology and tools?
- What would be the benefits?
- Conclusions
- Q/A

Typical Hardware Options

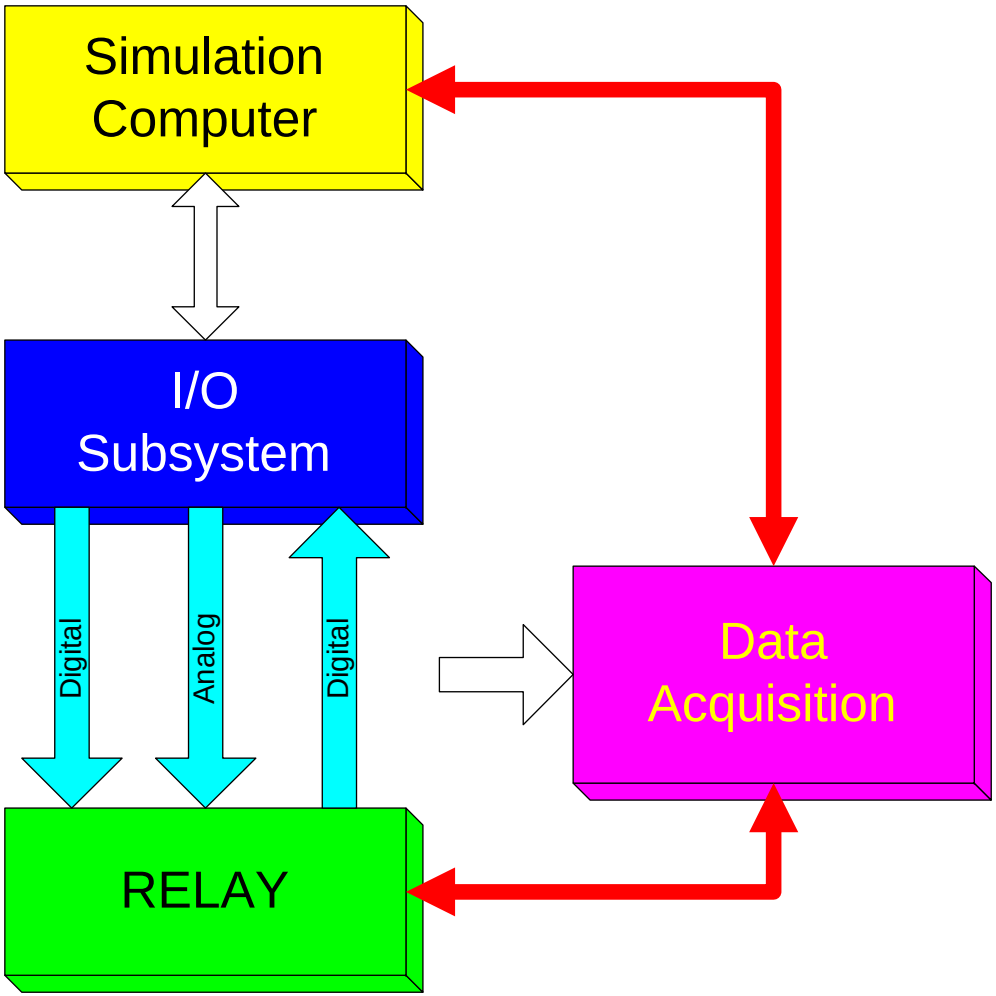

Typical Hardware Tools

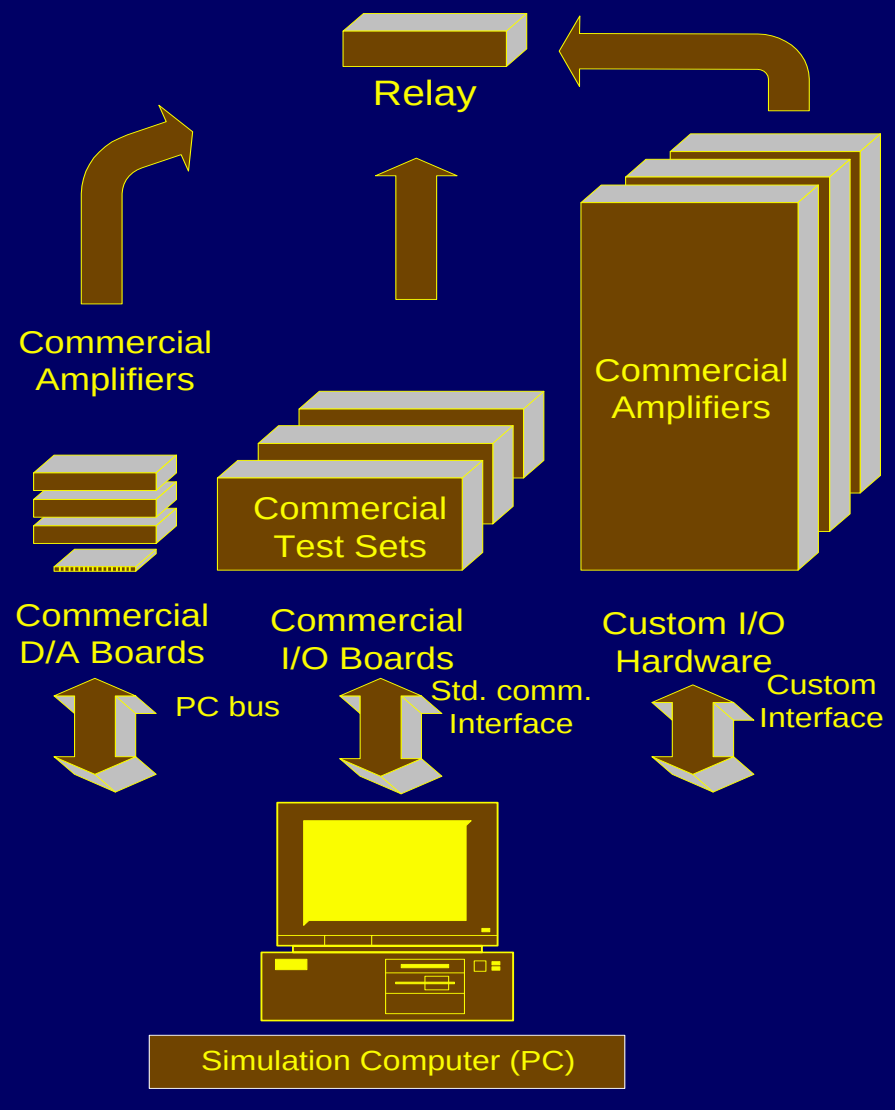

Hardware Options

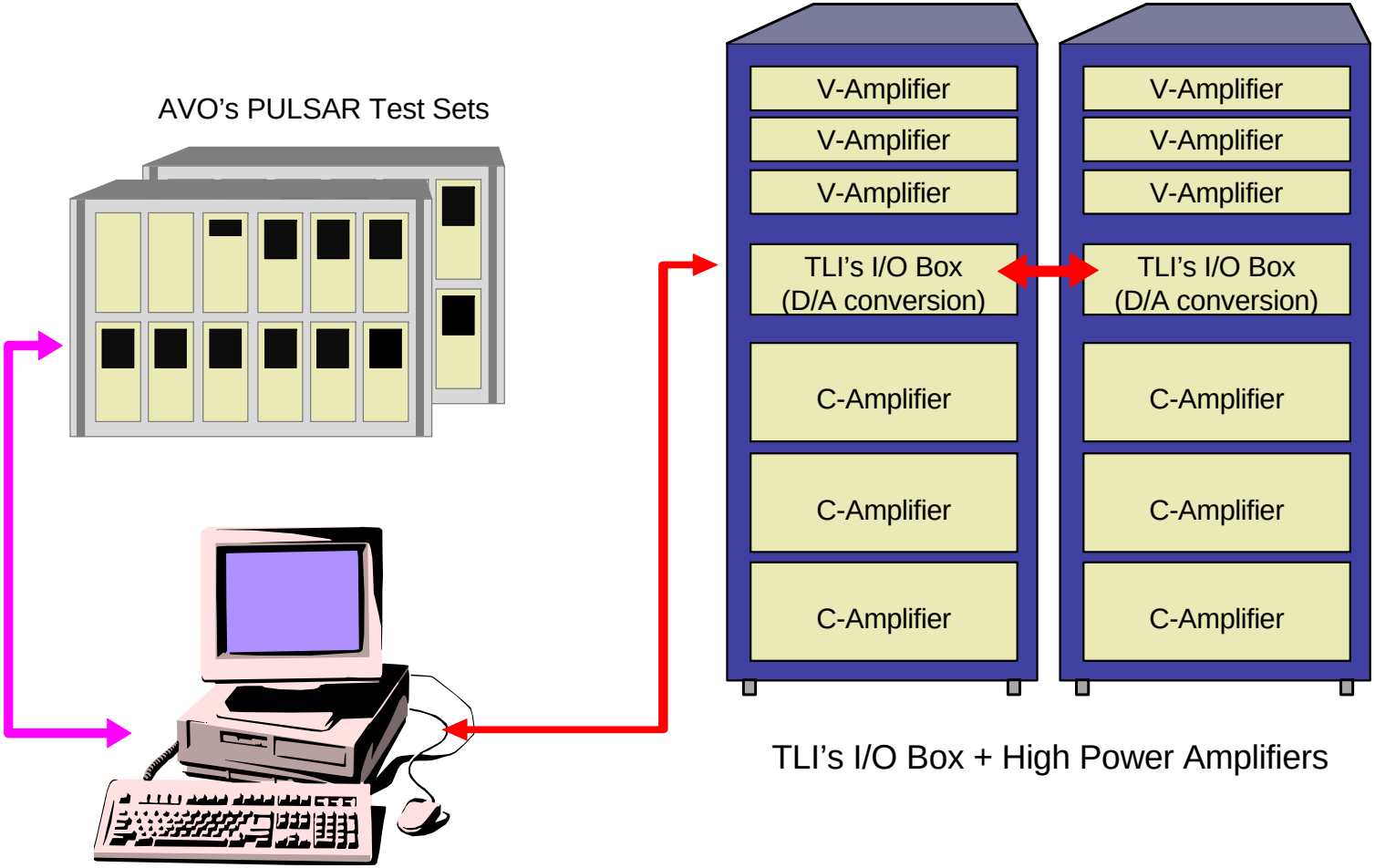

Typical Software Tools

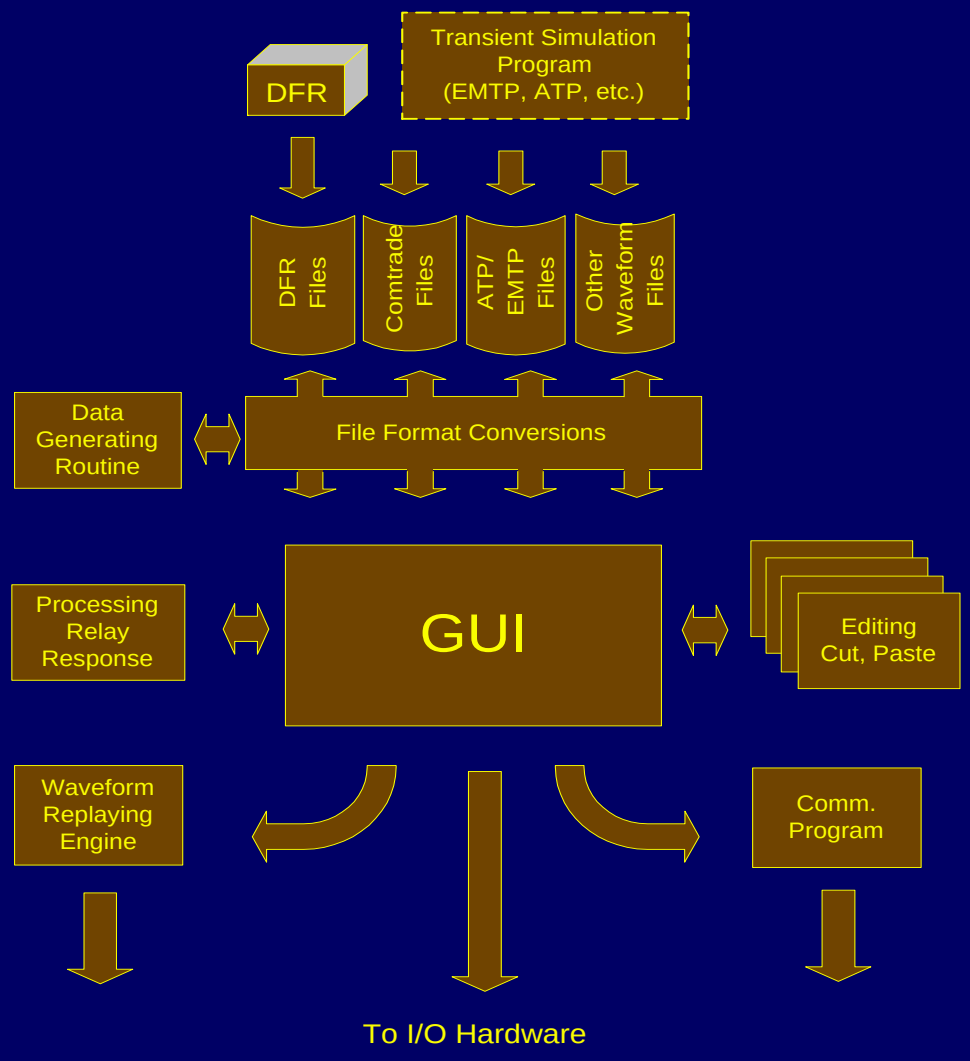

Software Options

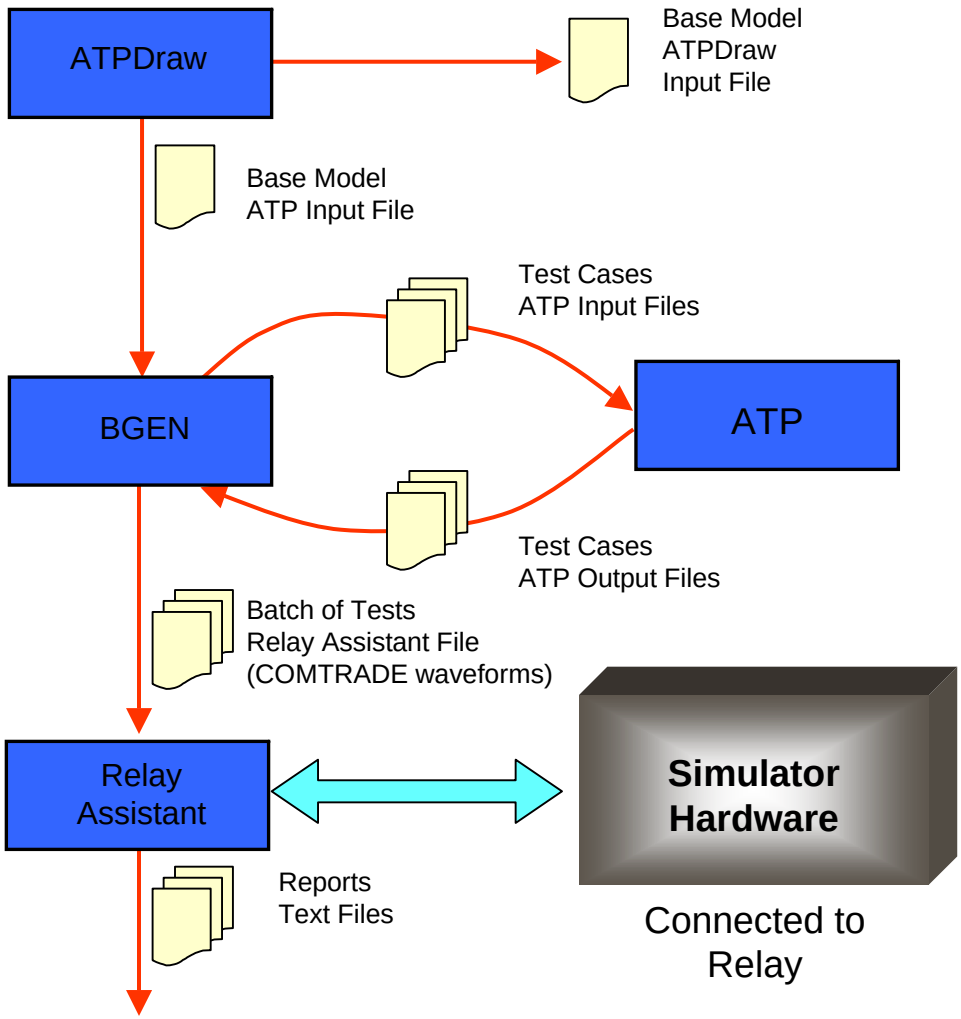

Outline

PSERC

- Why relay testing?
- What is the relay performance of interest?
- What is the existing relay test practice?
- How the existing practice may be enhanced?
- What would be the new (preferred) testing methodology and tools?
- What would be the benefits?
- Conclusions
- Q/A

What would be the benefits?

PSERC

- Purchase the best products for a given application
- Make sure the installed equipment is operating correctly
- Analyze any problems efficiently and in great detail
- Demonstrate to a regulator a reliable (selective) performance

Outline

PSERC

- Why relay testing?
- What is the relay performance of interest?
- What is the existing relay test practice?
- How the existing practice may be enhanced?
- What would be the new (preferred) testing methodology and tools?
- What would be the benefits?
- Conclusions
- Q/A

Conclusions

PSERC

- Existing test practice serves a limited purpose
- The purpose IS to check Setting CALIBRATION and NOT to evaluate relay application performance
- Relay PERFORMANCE needs to be evaluated to assure the BEST decision regarding:

  - investment

  - application practices

  - relay performance under critical conditions

References

PSERC

- M. Kezunovic, Y.Q. Xia, Y. Guo, C.W. Fromen, D.R. Sevcik, "Distance Relay Application Testing Using a Digital Simulator", *IEEE Transactions on Power Delivery*, Vol.12, No.1,January 1997, pp.72-82.
- M. Kezunovic, Y.Q. Xia, Y. Guo, C.W. Fromen, D.R. Sevcik, "An Advanced Method for Testing of Distance Relay Operating Characteristic", *IEEE Transactions on Power Delivery*, Vol.11, No.1, pp.149-157, January 1996.
- W. Fromen, D.R. Sevcik, M. Kezunović, "Trouble Shooting of Generator Differential Relay Operation Using Digital Simulators," *53rd Annual Conference for Protective Relay Engineers*, College Station, April 2000.

Outline

PSERC

- Why relay testing?
- What is the relay performance of interest?
- What is the existing relay test practice?
- How the existing practice may be enhanced?
- What would be the new (proffered) test methodology and tools?
- What would be the benefits?
- Conclusions
- Q/A

PSERC

The End

Q/A

Appendix

- Simulator types
- Simulator architecture (generic)
- Simulator software
- Simulator hardware
- Vendor information: www.tli-inc.com

Simulator Types

- Open-loop Simulator (Playback Digital Simulator): the response of an apparatus under test does not affect the simulation
- Close-loop Simulator: the response of an apparatus under test is fed back into the simulator and possibly affects the simulation (trip signals relayed to the models of circuit breakers, for example)

Simulator Types

- Real-time Simulator: the calculations for the output signals require less time than the sampling period. Thus, the computations can be done on-the-fly, i.e. in “real-time”
- Playback Simulator: the calculations for the output signals require more time than the sampling period. Thus, the computations must be done off-line, the results stored and next just played-back

Generic Architecture

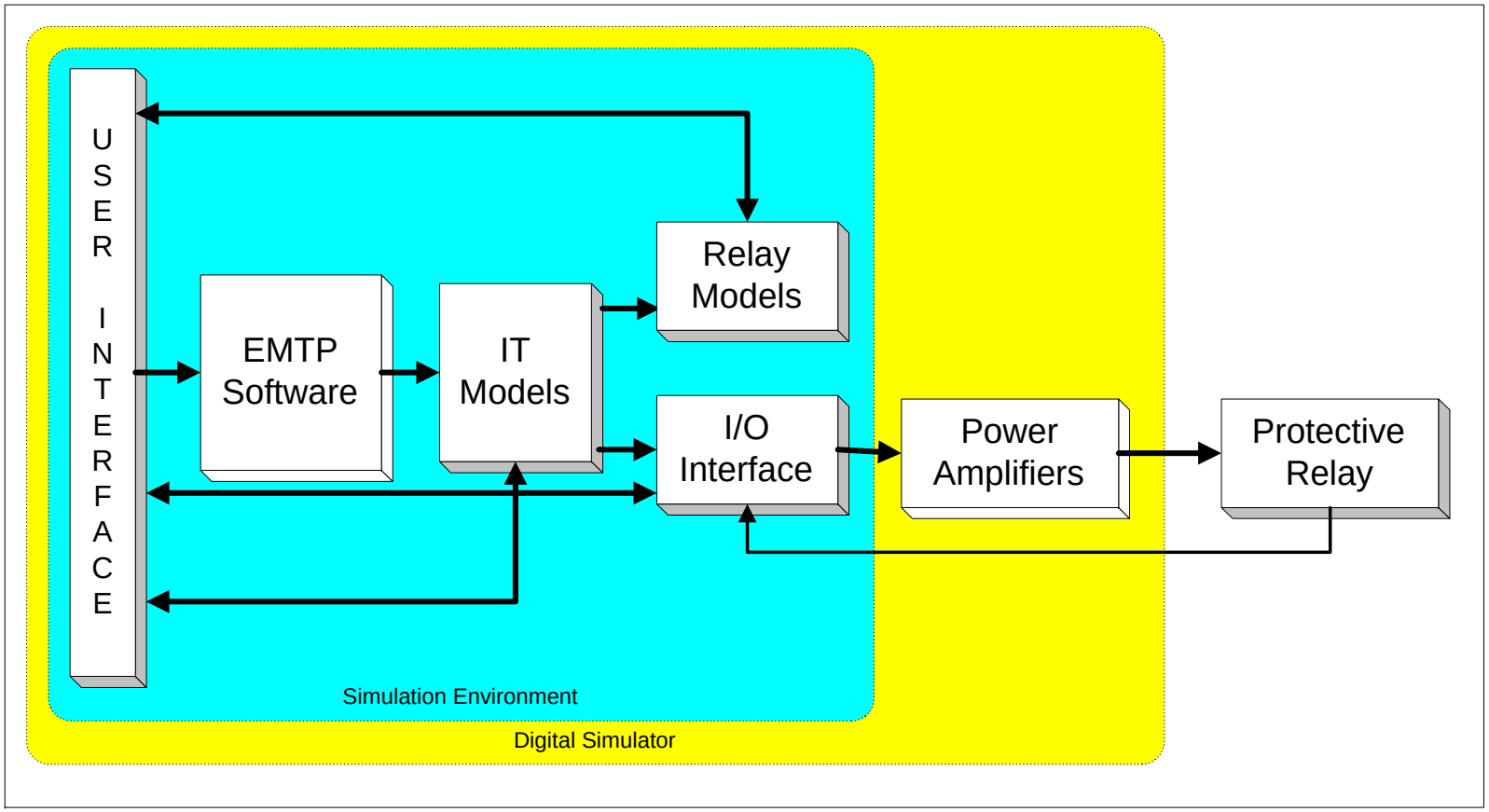

Generic Architecture

EMTP Software

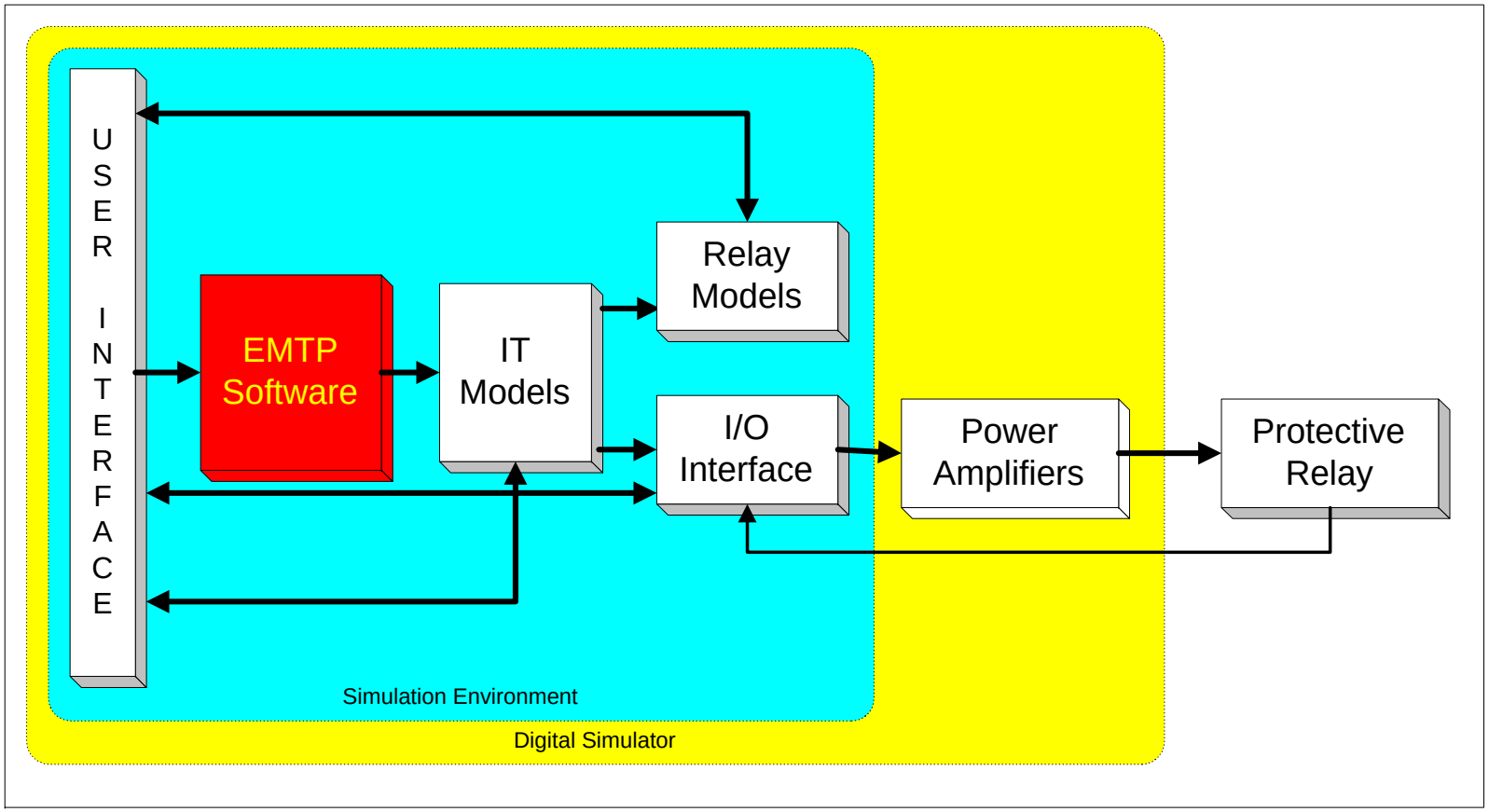

Generic Architecture
EMTP Software

- EMTP (EPRI/DCG)
- ATP (US/Canada/European)
- MORGAT, ARENE (EdF)
- NETOMAC (Siemens / TU Berlin)
- MicroTran
- EMTDC (Manitoba Hydro / RTDS Inc.)
- RTS (TAMU / TLI Inc.)

Generic Architecture
IT Models

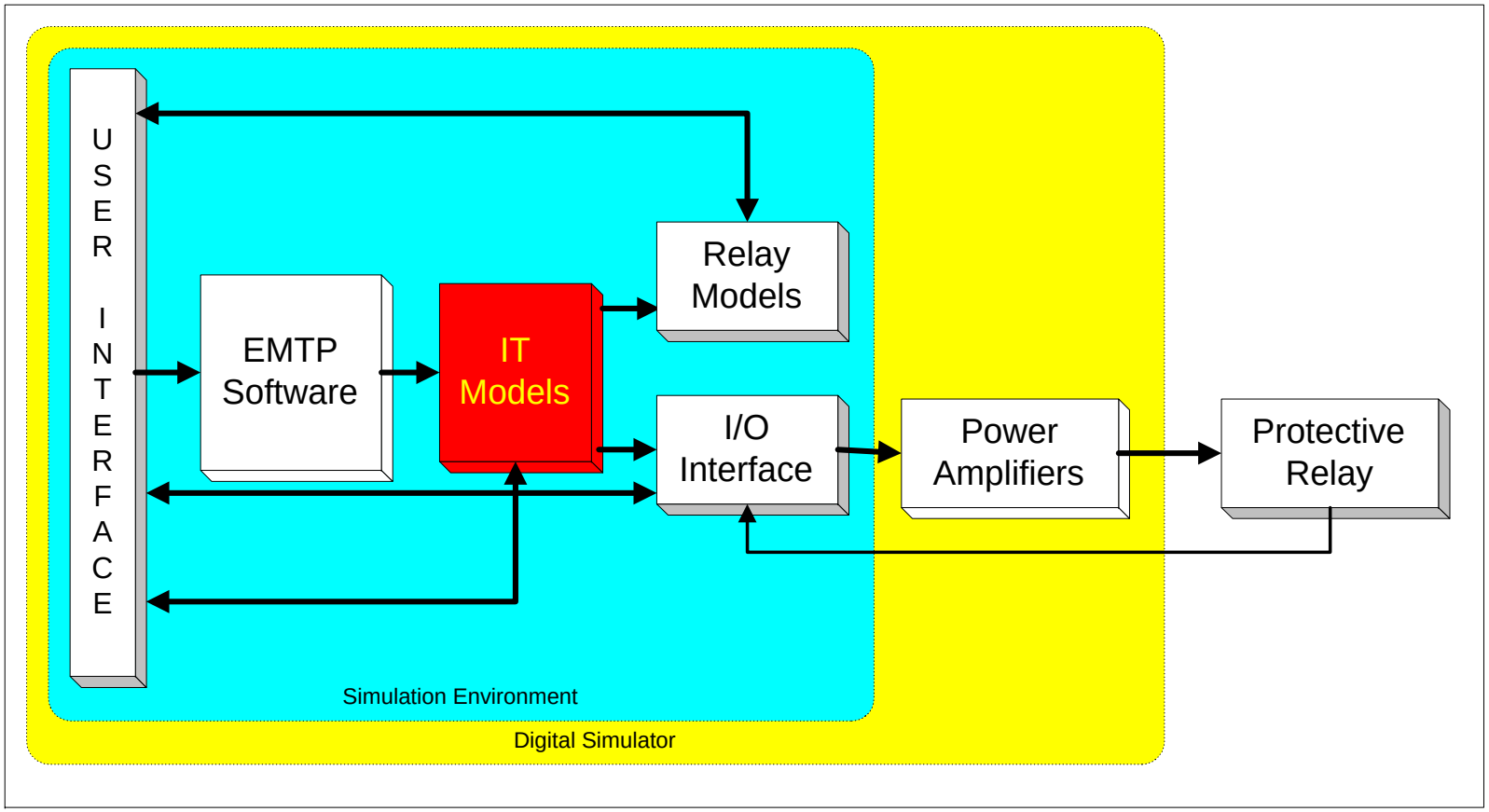

Generic Architecture
IT Models

- Instrument Transformers (ITs) have to be modeled for accurate relay testing:
  - ITs can be simulated by the EMTP software of a simulator
  - ITs can be simulated by the specialized software for enhancing the simulation power of the entire simulator

Generic Architecture
IT Models - Example: CCVT

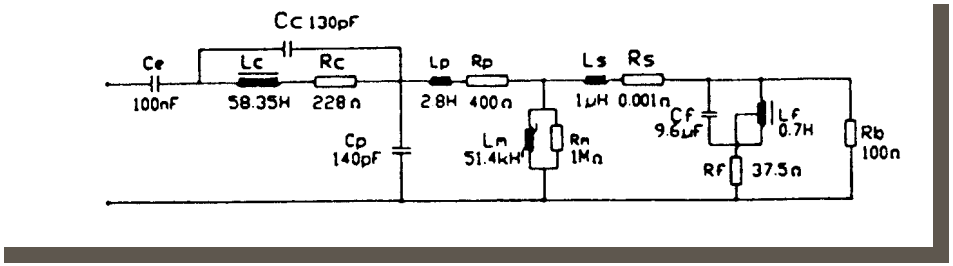

- PCA-5 CCVT

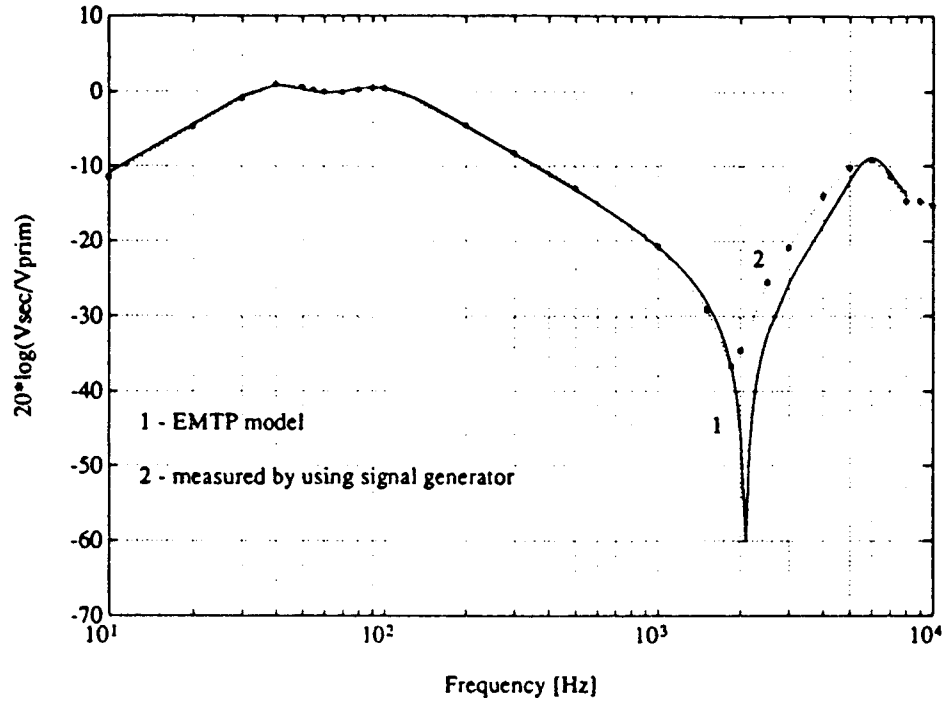

Generic Architecture
Relay Models

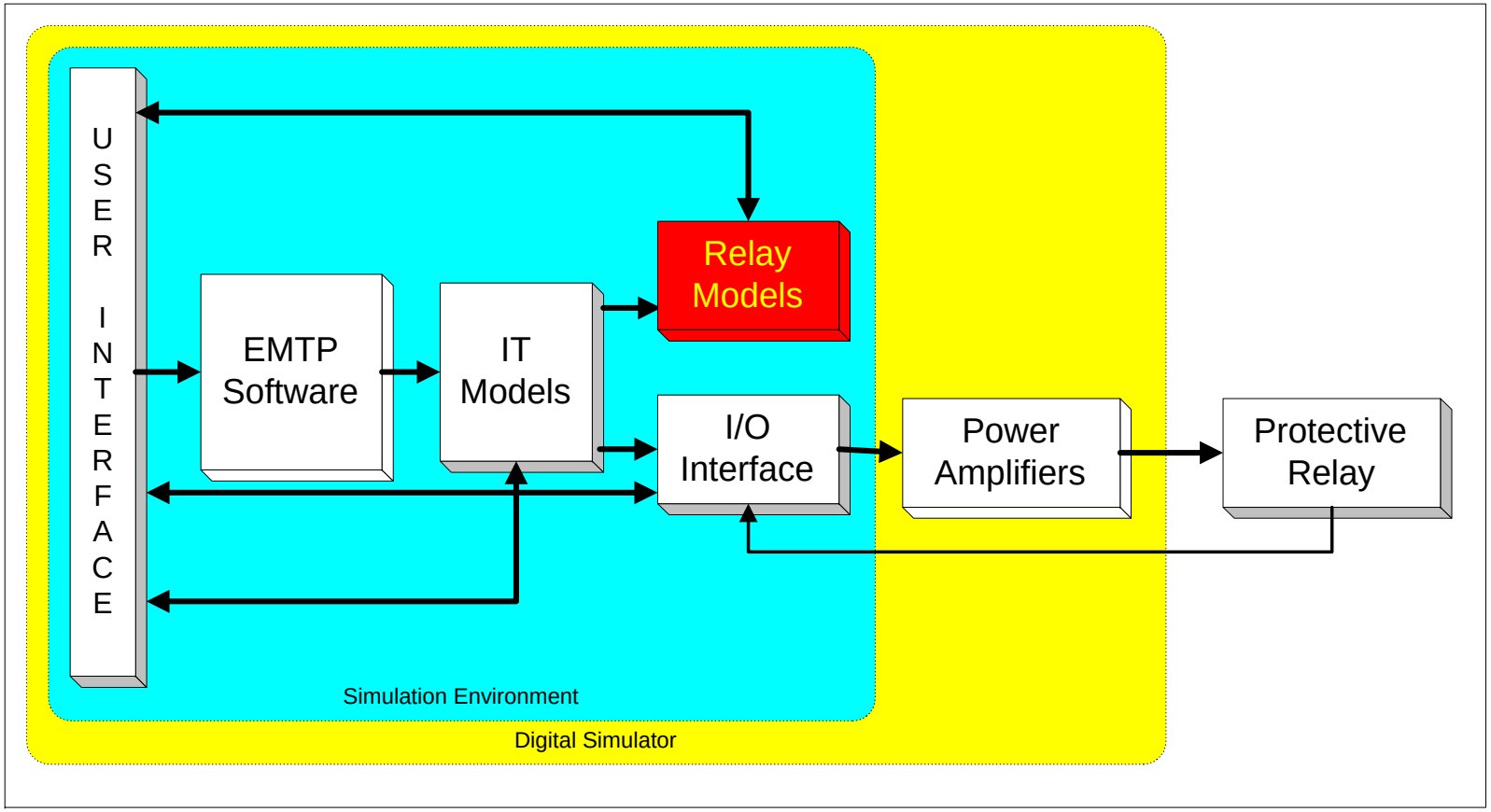

Generic Architecture

Relay Models

- A given relay can be tested using simulation if its software model is available
- Also, to test a given physical relay in situations involving relay interaction, other relays may need to be simulated by the simulator

Generic Architecture

User Interface

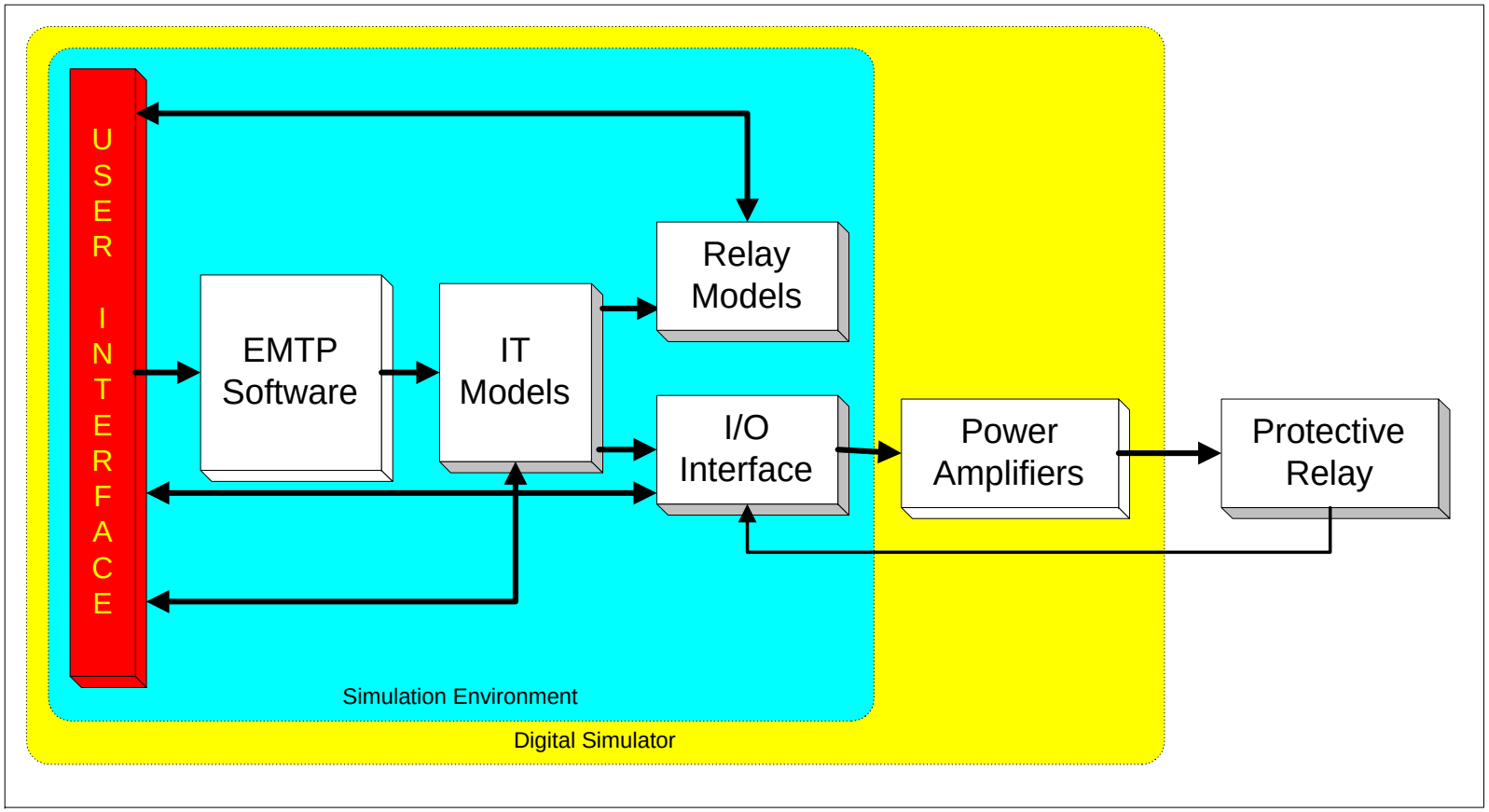

Generic Architecture

User Interface

- Means for Network Modeling
- Tools for Signal Editing and Viewing
- Test Set-up and Selection of Test Files
- Automated Batch Processing of Tests
- Test Result Reporting and Analyzing

Generic Architecture
I/O Interface

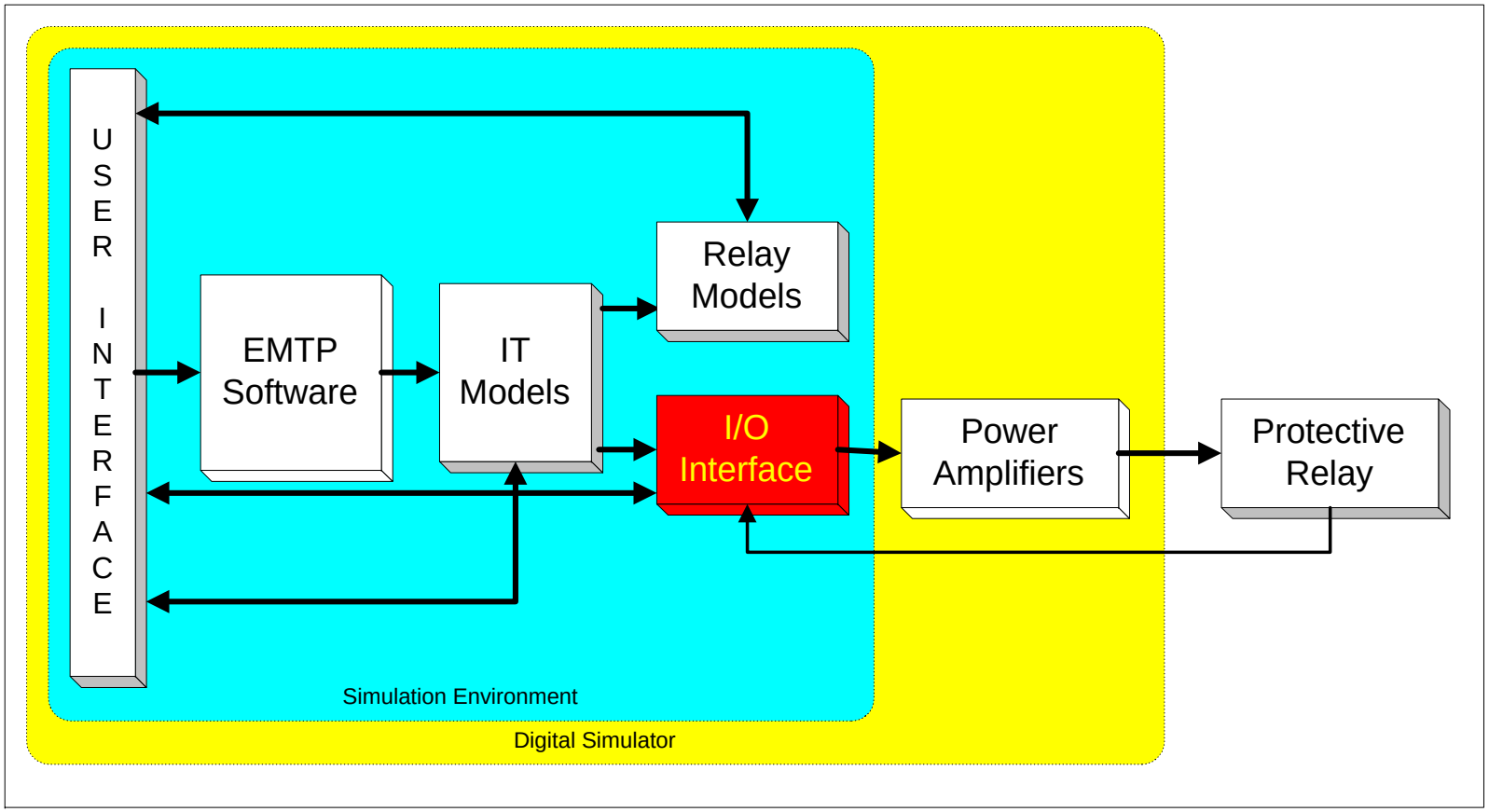

Generic Architecture
I/O Interface

- D/A Conversion
- Digital I/O
- A/D Conversion

Generic Architecture

Signal Reconstruction Requirements

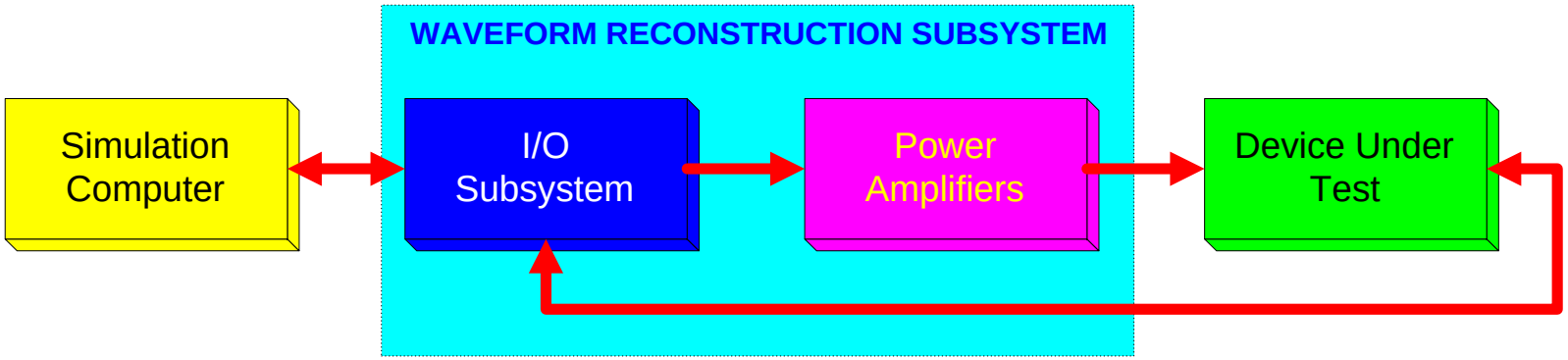

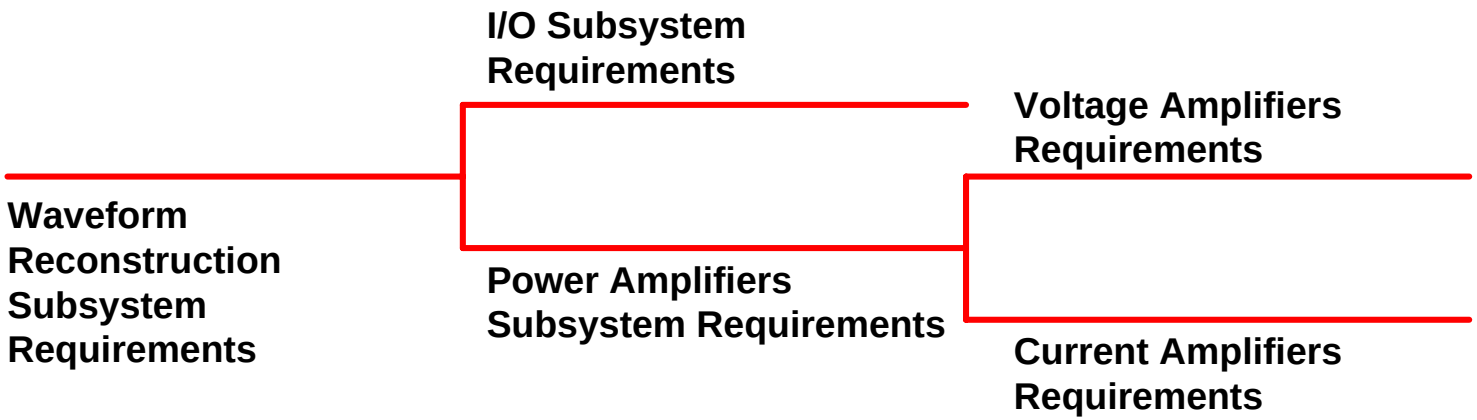

Generic Architecture

Typical I/O Subsystem Specifications

Input Capabilities		
1	Number of Digital Inputs*	16
2	Digital Input Specifications**	optically coupled, 50 – 150 V dc. / 10 mA
Output Capabilities		
3	Number of Digital Outputs*	16
4	Digital Output Rating**	optically coupled, 5 – 150 V dc. / 200 mA
5	Number of Analog Outputs*	8
6	Analog Output Specifications	± 10Vpk / 20 mApk
AC Performance		
7	Resolution	16 bits
8	Sample Rate	20 kHz (per channel)
9	Frequency Response	dc – 3 kHz /± 0.25 dB
10	Group Delay	50 μs
11	Group Delay Variations (0–3kHz)	± 1 μs
12	Stop Band Attenuation (f > fs/2)	> 60 dB
13	Time Skew Between Channels	< 500 ns
14	Output Impedance (0 – 3 kHz)	0.1 Ω
15	Output Offset (relative to FSR***)	< 0.1%
16	THD+N (relative to FSR***)	< 0.1%
17	IMD (relative to FSR***)	< 0.1%
18	Compensated Gain Error	< 0.2%
Environmental		
19	Operating Temperature	10 – 40 C^o
20	Output Offset Drift @ 20 C^o	< 0.05% FSR /C^o
21	Power Consumption	150 VA

Generic Architecture

Power Amplifiers

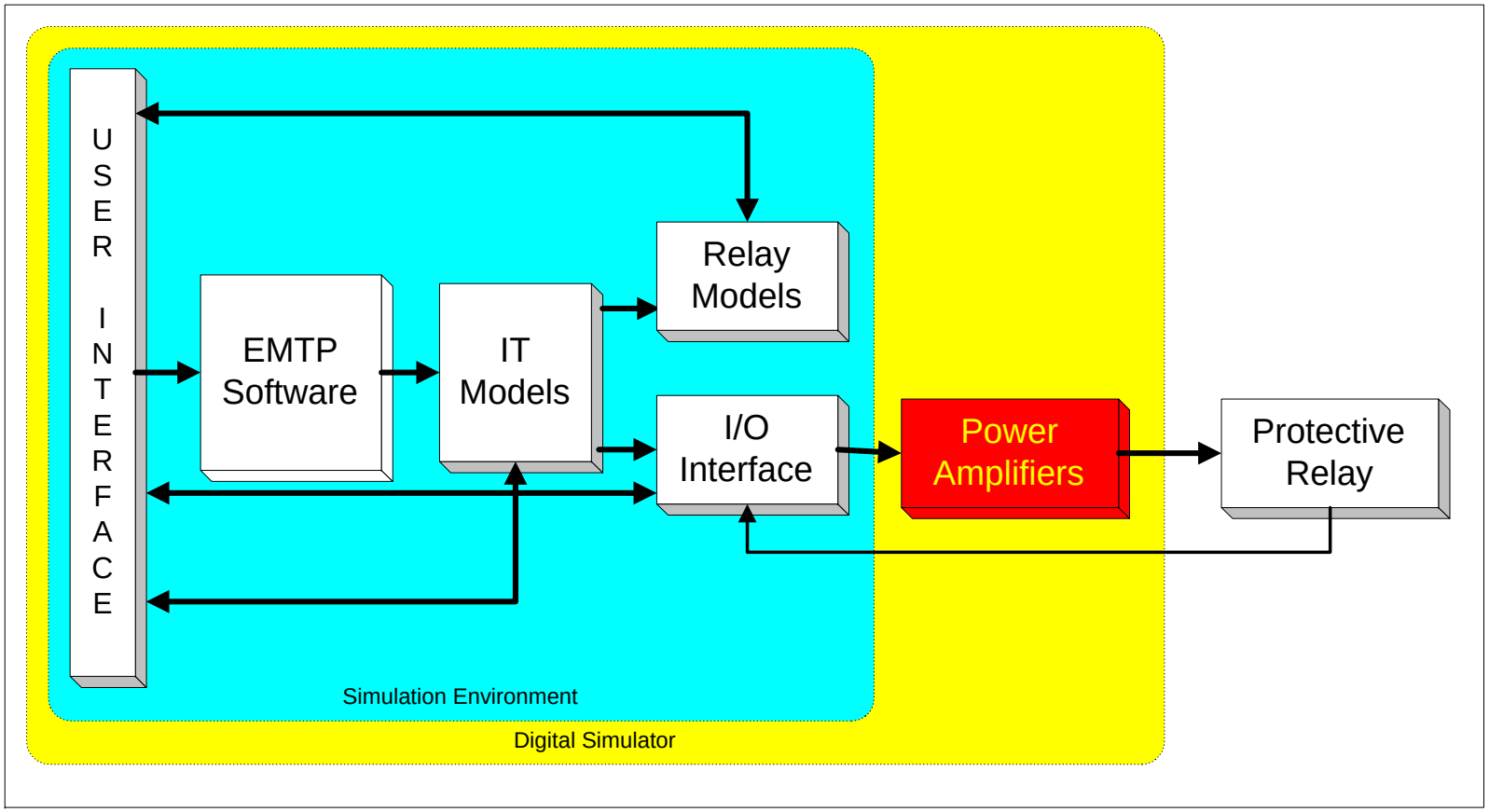

Generic Architecture

Typical Power Amplifiers Specifications

		Voltage Amplifiers	Current Amplifiers
Input Characteristics			
1	Input Impedance	>10 k Ω	>10 k Ω
2	Input Range	±10 Vpk	±10 Vpk
3	Common–mode Input Range	±10 Vpk	±10 Vpk
4	CMRR	60 dB	60 dB
5	Gain	30 V/V	10 A/V
Output Capabilities			
6	Maximum Output Voltage	±300 Vpk	±50 Vpk
7	Maximum Output Current	±1 Apk	±100 Apk
8	Continuous Output Power	150 VA	2500 VA
AC Performance			
9	Frequency Response	0 – 10 kHz	0 – 10 kHz
10	Accuracy ($\lvert \text{Gain}^* V_{in} - V_{out} \rvert$)	<1% error, dc–1kHz <3% error, 1kHz–3kHz <5% error above 3kHz	
11	Group Delay	<50 μs	<50 μs
12	Group Delay Variation (0 – 3 kHz)	±1μs	±1μs
13	Slew Rate	> 10V/μs	> 2.5V/μs
14	Power Bandwidth	0 – 10 kHz	0 – 10 kHz
15	Output Impedance (0 - 3 kHz)	< 0.5Ω	> 250Ω
16	Output Offset	<0.1 V	<0.05 A
17	THD+N	<0.1%	<0.1%
18	IMD	<0.1%	<0.1%
Load Constraints			
19	Worst Case Load Impedance	70 Ω – inf. *	0 – 5 kΩ **
Environmental			
20	Operating Temperature	10 – 40 C^o	10 – 40 C^o
21	Output Offset Drift @ 20 C^o	<0.05% / C^o	<0.05% / C^o
22	Power Consumption	600 VA	10 kVA

Generic Architecture
Relay Requirements

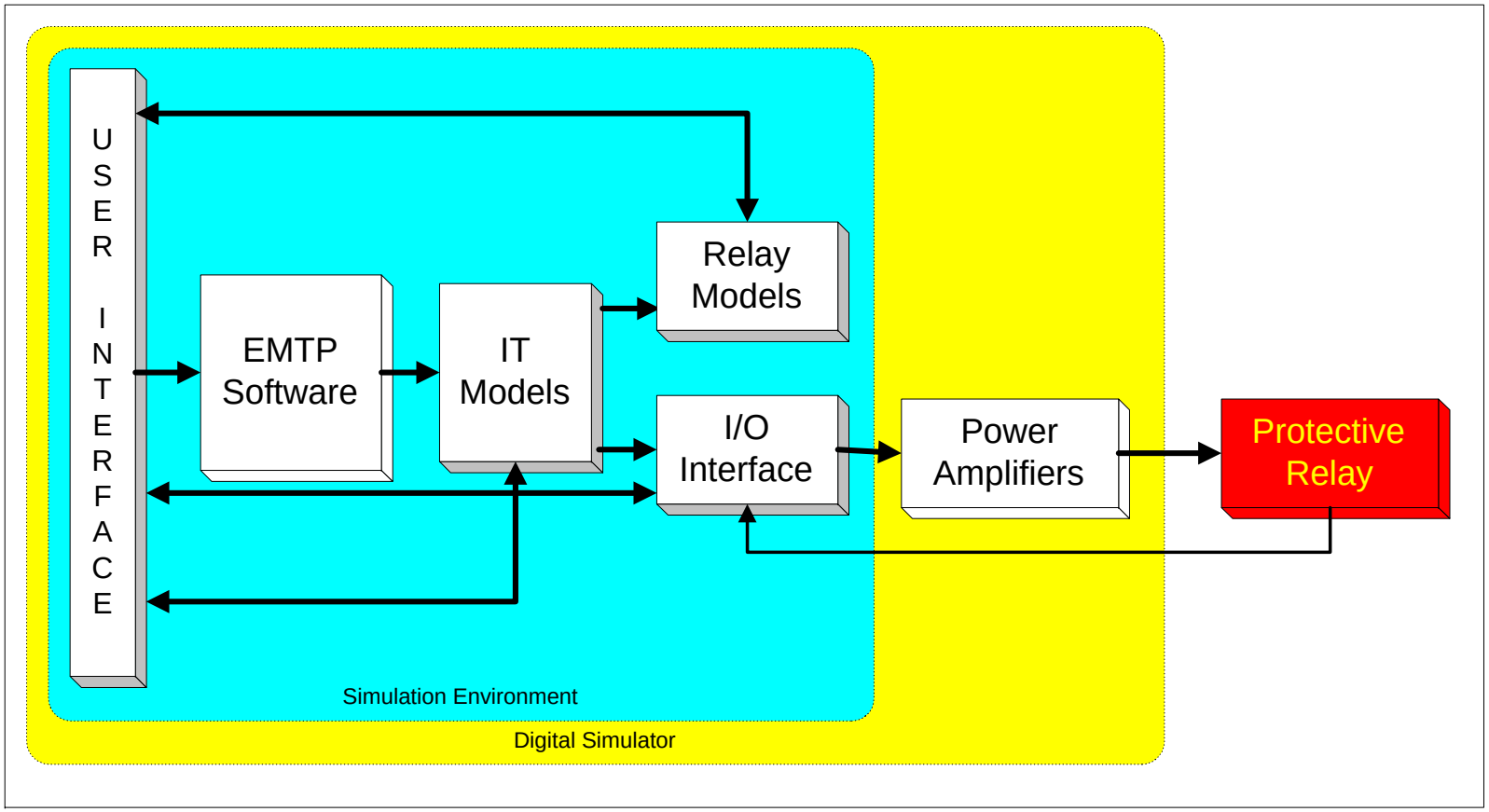

Generic Architecture

Relay Requirements

Relay Type	Rated Current	Rated Voltage	Setting Range	Burden at Rated Conditions
Induction Disk Time Over Current Relay	5	NA	0.5–16A	Min Tap 21Ω @ 0.26 pf Max Tap 0.35Ω @ 0.29 pf
Induction Disk Time Over Voltage Relay	NA	67–345	10–40%	Min Tap 35VA @ 0.35 pf Max Tap 15 VA @ 0.95 pf
Plunger Type Instantaneous Over Current Relay	25 1.5	NA NA	40–160A 0.5–2.0A	0.025 VA @ 0.33 pf 165 VA @ 0.40 pf
Plunger Type Instantaneous Over Voltage Relay	NA	115–460	60–140%	9 VA @ 0.5 pf
Transformer Percentage	5	NA	2.9–8.7A	2.9 A Tap Op: 0.128Ω Rest: 0.052Ω 8.7 A Tap Op: 0.028Ω Rest: 0.020Ω
Current Differential Relay	5	NA		1 X PU : 58Ω 25 X PU : 5.4Ω
Solid State Frequency Relay	NA	120	44–61 Hz	AC Powered: 11.7 VA @ 0.85 pf DC Powered: 1.3 VA @ 0.98 pf
High Impedance Bus Differential Relay (Voltage)	5	150	75–500V	Current Burden @ 5 A 1678Ω @ –24°
Cup Type Distance Relay	5	120	0.75–30Ω	I : 0.3Ω @ 0.98 pf V : 340Ω @ 0.99 pf
Solid State (Hybrid Analog–Digital) Distance Scheme	5	120	0.10–50Ω	I : 0.03Ω @ 5° V : 0.2 VA @ 50°
Numeric Digital Relay	5	120	0.10–50Ω	I : 0.02Ω @ 5° V : 0.15 VA @ 50°

Further reading

PSERC

- Simulator types
- Simulator architecture
- Simulator hardware/software
- Relay modeling
- Instrument transformer modeling
- User Interface
- Web site with references that can be downloaded: http://ee.tamu.edu/~pscp/index.html

Simulator types

PSERC

- M. Kezunović, J. Domaszewicz, V. Skendžić, M. Aganagić, J.K. Bladow, S.M. McKenna, D.M. Hamai, "Design, Implementation and Validation of a Real-Time Digital Simulator for Protection Relay Testing," *IEEE Transactions on Power Delivery*, Vol. 11, No. 1, pp. 158-164, January 1996.
- M. Kezunović, S.M. McKenna, "Real-Time Digital Simulator for Protective Relay Testing," *IEEE Computer Applications in Power*, Vol. 7, No. 3, pp. 30-35, July 1994.
- M. Kezunović, "Modular Simulators Match Cost and Performance Criteria," *IEEE Computer Applications in Power*, pp. 36-41, April 1996.
- M. Kezunović, A. Abur, Lj. Kojović, V. Skendžić, H. Singh, "DYNA-TEST Simulator for Relay Testing, Part I: Design Characteristics," *IEEE Transactions on Power Delivery*, Vol. 6, No. 4, pp. 1423-1429, October 1991.
- M. Kezunović, A. Abur, Lj. Kojović, V. Skendžić, H. Singh, "DYNA-TEST Simulator for Relay Testing, Part II: Performance Evaluation," *IEEE Transactions on Power Delivery*, Vol. 7, No. 3, pp. 1097-1103, July 1992.

Simulator Architecture

PSERC

- M. Kezunović, Z. Galijasević, "PC Based Dynamic Relay Test Bench," *Int'l. Conference on Modern Trends in the Protection Schemes of Electric Power Apparatus and Systems*," New Delhi, India, October 1998.
- M. Kezunović, C.W. Fromen, D.R. Sevcik, S.M. McKenna, B.A. Pickett, N. Izquierdo, "Advanced Testing Methods for Protective Relays Using New Digital Simulator Designs," *1996 CIGRÉ Session*, Paris, France, August 1996.
- S.M. McKenna, M. Kezunović, D. Hamai, Z. Galijasević, "The Choice of a Simulation Time Step in the Real-Time Simulator Applications," *First International Conference on Digital Power System Simulators (ICDS '95)*, College Station, Texas, April 1995
- M. Kezunović, A. Gopalakrishnan, J. Domaszewicz, Q. Chen, F. Ji, X. Qi, I. Rikalo, C.W. Fromen, D.R. Sevcik, S.M. McKenna, M. Hammam, "Design Characteristics of an Advanced Two-Terminal Digital Simulator for Relay Testing," *First International Conference on Digital Power System Simulators (ICDS '95)*, College Station, April 1995.

Simulator Hardware/software

PSERC

- M. Kezunović, B.A. Pickett, M.G. Adamiak, G.E. Alexander, K.R. Carr, G. Chirco, J. Esztergalyos, M. Jerosolimski, W.C. Kotheimer, R. Marttila, J.L. McElray, S.M. McKenna, P.G. McLaren, R.J. Murphy, J. Nordstrom, R. Ryan, V. Skendzic, S.I. Thompson, D.A. Tziouvaras F.M. Phillips, T. Sakaguchi, R.B. Sollero, "Digital Simulator Performance Requirements for Relay Testing," *IEEE Transactions on Power Delivery*, Vol. 13, No. 1, pp. 78-84, January 1998.
- M. Kezunović, D. Tziouvaras, B.A. Pickett, P.G. McLaren, "Digital Simulator Activity within IEEE Power Systems Relaying Committee," *First International Conference on Digital Power System Simulators (ICDS '95)*, College Station, April 1995
- N. Izquierdo Jr., M. Kezunović, Z. Galijasević, F. Ji, A. Gopalakrishnan, J. Domaszewicz, "Digital Simulator Design for Real-Time and Open-Loop Applications," *First International Conference on Digital Power System Simulators (ICDS '95)*, College Station, Texas, April 1995.

Relay Modeling

PSERC

- P.G. McLaren, C. Henville, V. Skendzic, A. Girgis, M. Sachdev, G. Benmouyal, K. Mustaphi, M. Kezunović, Lj. Kojovic, M. Meisinger, C. Simon, T. Sidhu, R. Marttila, D. Tziouvaras, "Software Models for Relays," *IEEE Transactions on Power Delivery*, Vol. 16, No.2, pp. 238-246, April 2001.
- M. Kezunović, "User Friendly, Open System Software for Teaching Protective Relaying Application and Design Concepts," *IEEE Transactions on Power Systems*, Vol. 18, No. 3, August 2003.
- M. Kezunović, Y. Guo, "Modeling and Simulation of the Power Transformer Faults and Related Protective Relay Behavior," *IEEE Transactions On Power Delivery*, Vol. 15, No. 1, pp. 44-50, January 2000.
- M. Kezunović, B. Kasztenny, R. Martinez-Lagunes, N. Suphasan, "New Software Tools for Power System Relaying Utilizing Modeling and Simulation," ISCA 14th Int'l. Conference on Computers and Their Applications, Cancun, Mexico, April 1999.

Instrument Transformer modeling

PSERC

- D. Tziouvaras, P. McLaren, C. Alexander, D. Dawson, J. Esztergalyos, C. Fromen, M. Glinkowski, I. Hasenwinkle, M. Kezunović, L. Kojović, B. Kotheimer, R. Ruffel, J. Nordstrom, S. Zochol, "Mathematical Models for Current, Voltage and Coupling Capacitor Voltage Transformers," *IEEE Transactions on Power Delivery,* Vol. 15, No. 1, pp. 62-72, January 2000.
- M. Kezunović, Lj. Kojović, V. Skendžić, C.W. Fromen, D.R. Sevcik, S.L. Nilsson, "Digital Models of Coupling Capacitor Voltage Transformers for Protective Relay Transient Studies," *IEEE Transactions on Power Delivery*, Vol. 7, No. 4, pp. 1927-1935, October 1992.
- M. Kezunović, C. Fromen, F. Phillips, Lj. Kojović, A. Abur, D. Sevcik, "Experimental Evaluation of EMTP Based Current Transformer Models for Protective Relay Transient Study," *IEEE Transactions on Power Delivery*, Vol. 9, No. 1, pp. 405-413, January 1994.

User Interface

PSERC

- M Kezunović, T. Popović, D. Sevcik, M. DoCarmo, "Transient Testing of Protection Relays: Results, Methodology and Tools," *International Conference on Power System Transients – IPST 2003*, New Orleans, September 2003
- M.Kezunović, T. Popović, "Assessing Application Features of Protective Relays and Systems Through Automated Testing Using Transients," *IEEE/PES T&D 2002 Asia Pacific Conference*, Yokohama, Japan, October 2002.
- M. Kezunović, F. Ji, S.M. McKenna, D.Hamai, "Graphical User Interface for a Digital Real-Time Simulator," *First International Conference on Digital Power System Simulators (ICDS '95)*, College Station, Texas, April 1995.
- B. Kasztenny, M. Kezunović, J. Galijasević, D. Williams, "A New ATP Add-On for Modeling Internal Faults in Power Transformers," *American Power Conference*, Chicago, April 2000.